YAMAHA

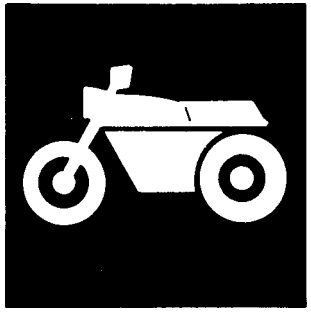

PARTS CATALOGUE

YZF–R1 (5JJ1) EUROPE

205JJ–300E1

YAMAHA GENUINE Parts & Accessories

NEWS No.	DATE	COMMENT
PE0-MC-040134	Oct.,19,2004	FIG.17: TRANSMISSION LIST& ILLUSTRATION CORRECTION
PE0-MC-060079	Jul.,25,2006	FIG.1: CYLINDER LIST& ILLUSTRATION CORRECTION
PE0-MC-140061	Oct.,16,2014	MOD:FIG.28/29 FRONT WHEEL LIST&ILLUST REVISION

2014/10/21

A2

A3

FOREWORD

This Parts Catalogue is related to the parts for the model(s) in the below frame. When you are ordering replacement parts, please refer to this Parts Catalogue and quote both part numbers and part names correctly.

YZF–R1(5JJ1)

1. Modifications or additions which have been made after issue of the Parts Catalogue will be announced in the Yamaha Parts News.
   It is advisable that you make necessary corrections to the Parts Catalogue according to the Yamaha Parts News.
2. Abbreviations
   The Following abbreviations are used in this Parts Catalogue.
   "UR" Use specified parts number.
   "UN" Use as many as needed.
   "AP" Alternate Parts
   "LM" Local Made (Parts need to be ordered locally)
   "F#" Frame No. (Applicable machine No.)
3. Parts, which are to be supplied in an assembly, are listed with a dot(.) in front of the part name as shown below.

   EXAMPLE
   CARBURETOR ASSY
   .JET, PILOT
   .NOZZLE, MAIN
4. Number of component for assembly
   The numeral appearing to the right of each component part indicates the quantity of parts for each assembly unit.

   EXAMPLE

PART NO.	DESCRIPTION	Q'TY	REMARKS
2F5–83310–60	FRONT FLASHER LIGHT ASSY	2	
115–83311–60	.BULB (6V–18W)	1	
1M1–83309–60	.REFLECTOR	1	

5. Applicable colors of graphics are represented in the "REMARKS" as shown below.

PART NO.	DESCRIPTION	Q'TY	REMARKS
2N4–24110–00–X5	.FUEL TANK COMP.	2	MXR
3J1–24240–10	.GRAPHIC, FUEL TANK	1	for MXR

6. Applicable Serial No.

   Engine Serial No.

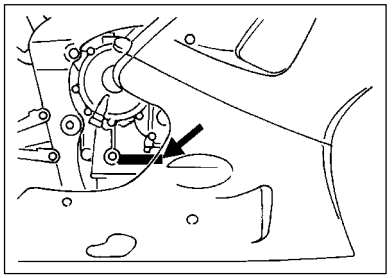

   Frame Serial No.

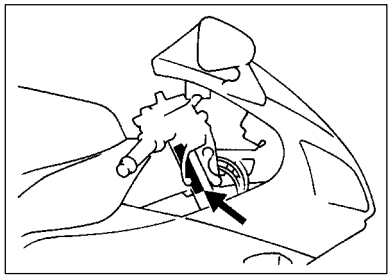

7. Note that the illustrations for reference in funding parts numbers, not to be used for assembling. When assembling, pleas use the applicable service manual.
8. The asterisk (*) before a reference number indicates modification items after the first edition.

MODEL LABEL

(1) A label called “Model Label” is affixed in the location as indicated in (3) below. When using this parts catalogue, please be sure to cross–refer the “model code – production code No.” in the catalogue to the “model code – production code No. “indicated on the Model Label affixed onto the product concemed.

(2) “Model Label”Indication

a b ○ xxxx – xxx ● x c	a: Model Type Code b: Production Code No. c: Colouring Type

○ 4TW1–010 ● A

(3) Model Label Affixing Location

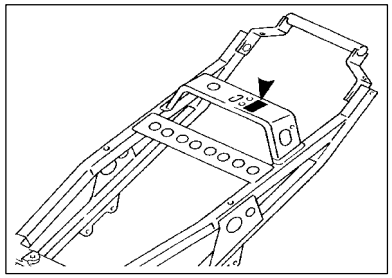

(4) Model Code – Production Code Number of Model Listed in This Parts Catalog

Model Code	Production Code No.	Country (destination)	Model Code	Production Code No.	Country (destination)
5JJ1	010	ITALY			
	020	AUSTRIA			
	030	BELGIUM			
	040	SWITZERLAND			
	060	DENMARK			
		FINLAND			
		NORWAY			
	080	ENGLAND			
	090	GREECE			
	100	HOLLAND			
	101	HOLLAND			
	110	PORTUGAL			
	120	SWEDEN			

(5) Colouring Information

Colouring type code	Colour code	Colour Name	Abbrevi-ation
A	0121	VIVID RED COCKTAIL 1	VRC1
B	0564	DEEP PURPLISH BLUE METALLIC C	DPBMC

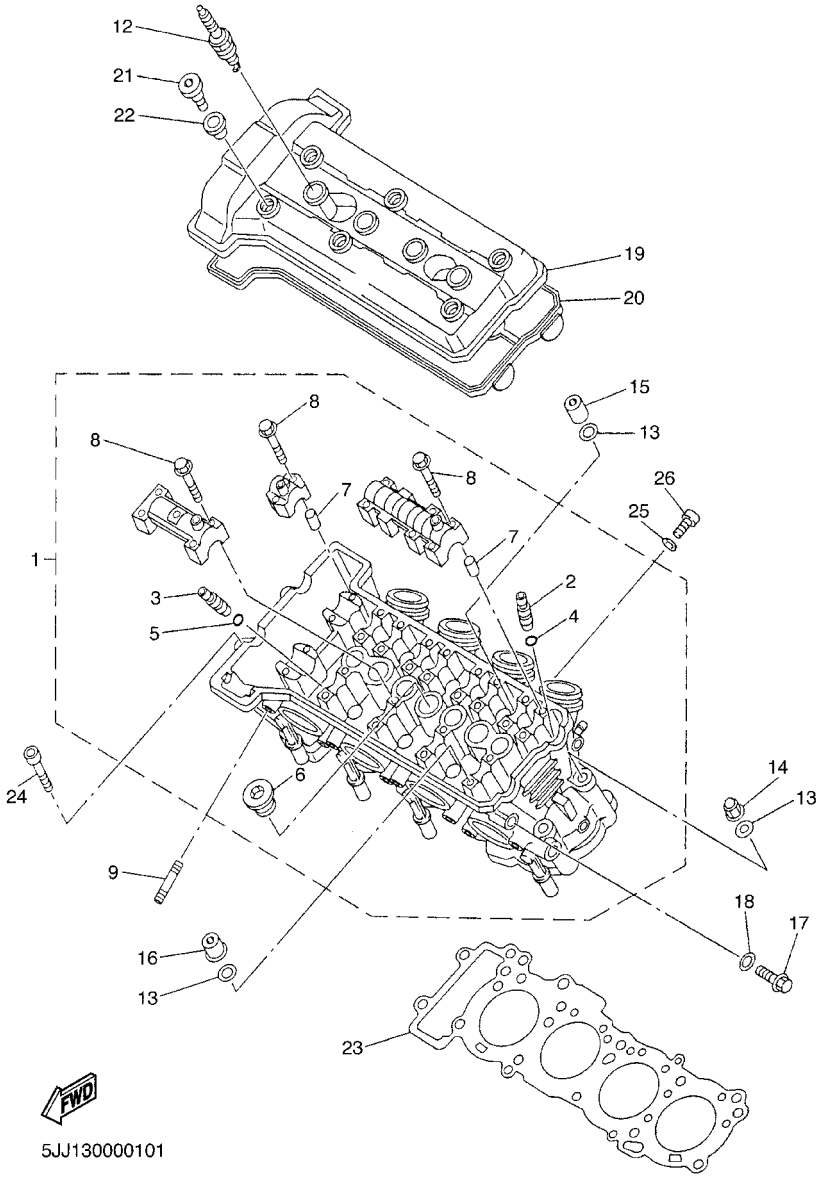

FIG. 1 CYLINDER

REF. NO.	PART NO.	DESCRIPTION	5JJ1					REMARKS
1	5JJ–11101–01	CYLINDER HEAD ASSY	1					
2	3TJ–11133–10	.GUIDE, INTAKE VALVE	12					
3	1WG–11133–11	.GUIDE, INTAKE VALVE	8					
4	93440–07149	.CIRCLIP	12					
5	93440–10153	.CIRCLIP	8					
6	90340–27001	.PLUG, STRAIGHT SCREW	1					
7	91808–16023	.PIN, DOWEL	12					
8	90105–06384	.BOLT, WASHER BASED	28					
9	95617–08625	BOLT, STUD	8					
12	94701–00318	PLUG, SPARK (NGK R CR9E)	4					UR
	94701–00319	PLUG, SPARK (ND U27ESR–N)	4					UR
13	90201–10013	WASHER, PLATE	10					
14	90176–10075	NUT, CROWN	2					
15	90179–10683	NUT	3					
16	90179–10693	NUT	5					
17	95027–06012	BOLT, FLANGE	1					
18	90430–06014	GASKET	1					
19	4XV–11191–00	COVER, CYLINDER HEAD 1	1					
20	4XV–11193–00	GASKET, HEAD COVER 1	1					
21	90109–066F0	BOLT	6					
22	4KG–1111G–00	RUBBER, MOUNT 1	6					
23	4XV–11181–00	GASKET, CYLINDER HEAD 1	1					
24	91317–06060	BOLT	2					
25	90430–06014	GASKET	3					
26	91317–06012	BOLT	3					

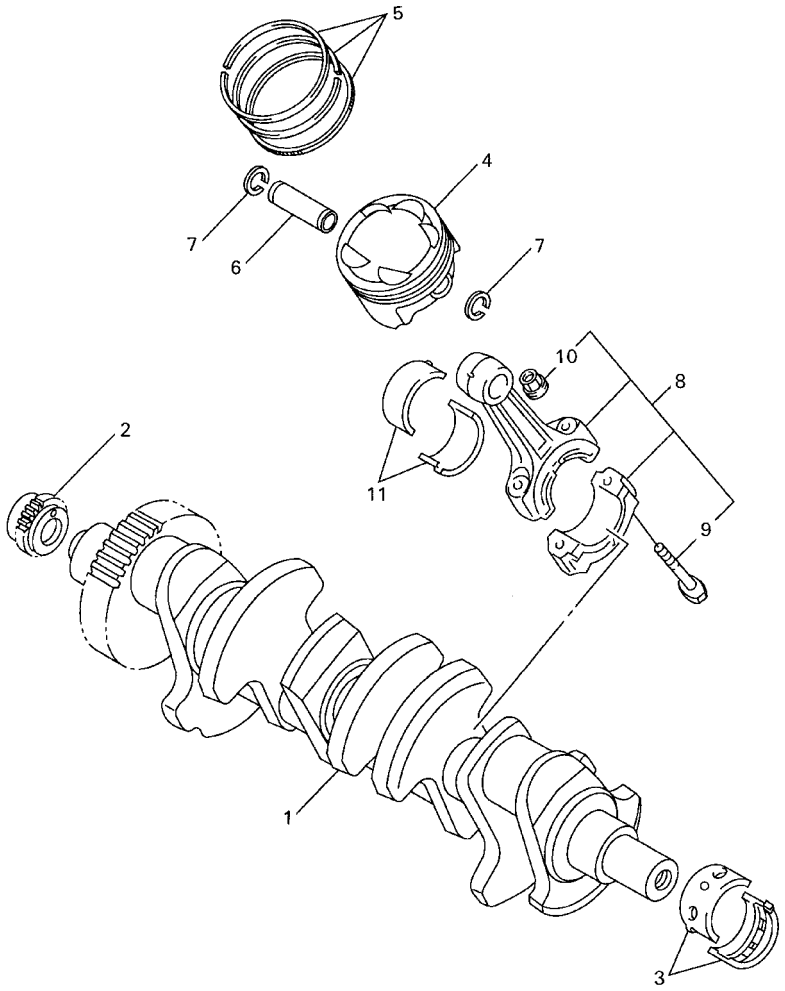

4XV352-8020

FIG. 2 CRANKSHAFT. PISTON

REF. NO.	PART NO.	DESCRIPTION	5JJ1					REMARKS
1	4XV–11411–00	CRANKSHAFT	1					
2	4XV–11549–00	SPROCKET, CAM CHAIN	1					
3	3GM–11416–00	PLANE BEARING, CRANKSHAFT 1	10					UR BLUE
	3GM–11416–10	PLANE BEARING, CRANKSHAFT 1	10					UR BLACK
	3GM–11416–20	PLANE BEARING, CRANKSHAFT 1	10					UR BROWN
	3GM–11416–A0	PLANE BEARING, CRANKSHAFT 1	10					UR WHITE
	3GM–11416–B0	PLANE BEARING, CRANKSHAFT 1	10					UR PURPLE
4	4XV–11631–00	PISTON (STD)	4					
5	4XV–11603–00	PISTON RING SET (STD)	4					
6	4XV–11633–00	PIN, PISTON	4					
7	90468–12069	CLIP	8					
8	4XV–11650–00	CONNECTING ROD ASSY	4					
9	4XV–11654–00	.BOLT, CONNECTING ROD	2					
10	90179–08327	.NUT	2					
11	3GM–11656–00	PLANE BEARING, CONNECTING ROD	8					UR BLUE
	3GM–11656–10	PLANE BEARING, CONNECTING ROD	8					UR BLACK
	3GM–11656–A0	PLANE BEARING, CONNECTING ROD	8					UR WHITE
	3GM–11656–B0	PLANE BEARING, CONNECTING ROD	8					UR PURPLE

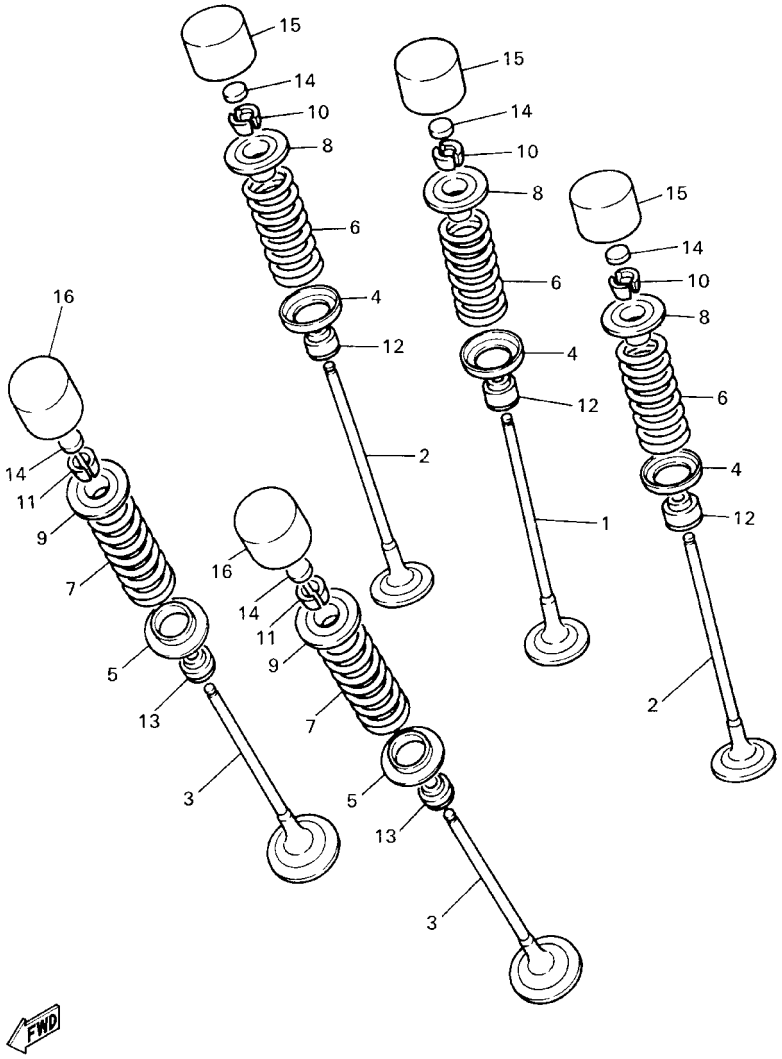

4XV352-8030

FIG. 3 VALVE

REF. NO.	PART NO.	DESCRIPTION	5JJ1					REMARKS
1	4XV–12111–00	VALVE, INTAKE	4					
2	4XV–12112–00	VALVE, INTAKE 2	8					
3	5JJ–12121–00	VALVE, EXHAUST	8					
4	1HX–12116–00	SEAT, VALVE SPRING	12					
5	3GM–12126–00	SEAT, VALVE SPRING 2	8					
6	4XV–12113–00	SPRING, VALVE INNER	12					
7	4XV–12114–00	SPRING, VALVE OUTER	8					
8	1HX–12117–00	RETAINER, VALVE SPRING	12					
9	1WG–12117–00	RETAINER, VALVE SPRING	8					
10	1HX–12118–00	COTTER, VALVE	24					
11	1WG–12118–00	COTTER, VALVE	16					
12	4TV–12119–00	SEAL, VALVE STEM	12					
13	4SV–12119–00	SEAL, VALVE STEM	8					
14	1HX–12168–00	PAD, ADJUSTING 2 (1.20)	20					UR
	1HX–12168–20	PAD, ADJUSTING 2 (1.25)	20					UR
	1HX–12168–40	PAD, ADJUSTING 2 (1.30)	20					UR
	1HX–12168–60	PAD, ADJUSTING 2 (1.35)	20					UR
	1HX–12168–80	PAD, ADJUSTING 2 (1.40)	20					UR
	1HX–12168–A0	PAD, ADJUSTING 2 (1.45)	20					UR
	1HX–12168–F0	PAD, ADJUSTING 2 (1.50)	20					UR
	1HX–12168–H1	PAD, ADJUSTING 2 (1.55)	20					UR
	1HX–12168–K1	PAD, ADUSTING 2 (1.60)	20					UR
	1HX–12168–M1	PAD, ADJUSTING 2 (1.65)	20					UR
	1HX–12168–R1	PAD, ADJUSTING 2 (1.70)	20					UR
	1HX–12168–U1	PAD, ADJUSTING 2 (1.75)	20					UR
	1HX–12168–W1	PAD, ADJUSTING 2 (1.80)	20					UR
	1HX–12168–Y1	PAD, ADJUSTING 2 (1.85)	20					UR

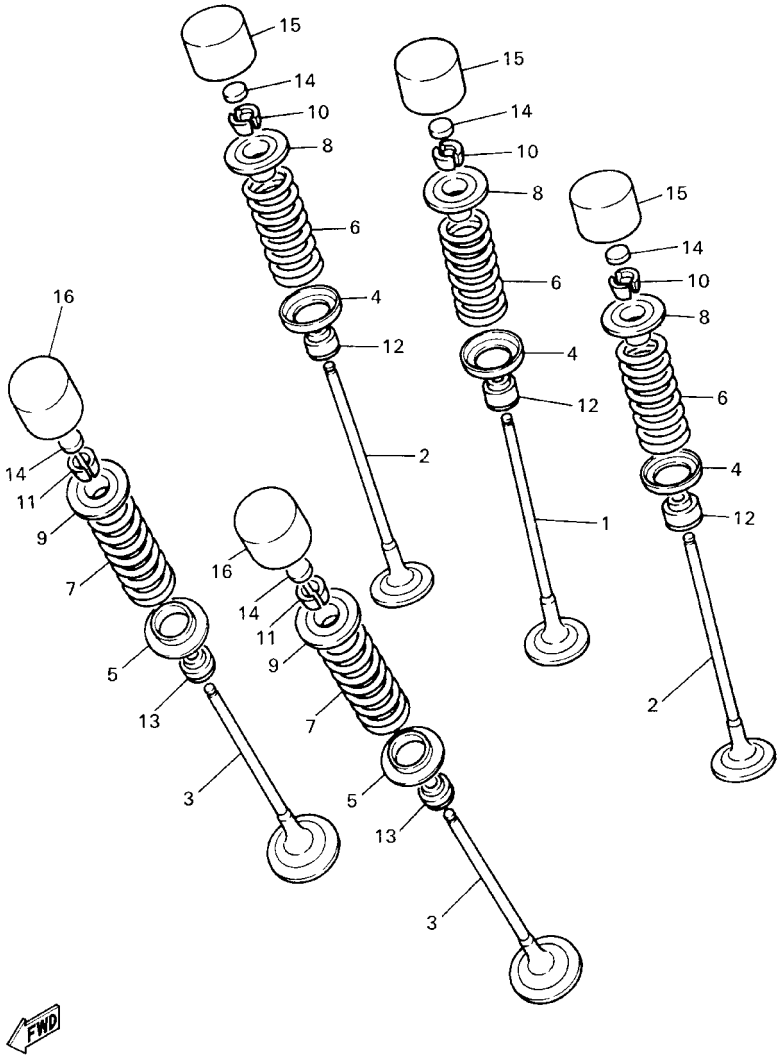

4XV352-8030

FIG. 3 VALVE

REF. NO.	PART NO.	DESCRIPTION	5J1					REMARKS
14	1HX–12169–11	PAD, ADJUSTING 2 (1.90)	20					UR
	1HX–12169–31	PAD, ADJUSTING 2 (1.95)	20					UR
	1HX–12169–50	PAD, ADJUSTING 2 (2.00)	20					UR
	1HX–12169–70	PAD, ADJUSTING 2 (2.05)	20					UR
	1HX–12169–90	PAD, ADJUSTING 2 (2.10)	20					UR
	1HX–12169–E0	PAD, ADJUSTING 2 (2.15)	20					UR
	1HX–12169–G0	PAD, ADJUSTING 2 (2.20)	20					UR
	1HX–12169–J0	PAD, ADJUSTING 2 (2.25)	20					UR
	1HX–12169–L0	PAD, ADJUSTING 2 (2.30)	20					UR
	1HX–12169–N0	PAD, ADJUSTING 2 (2.35)	20					UR
	1HX–12169–T0	PAD, ADJUSTING 2 (2.40)	20					UR
15	3LN–12153–20	LIFTER, VALVE	12					UR BLUE
	3LN–12153–09	LIFTER, VALVE (O/S)	12					UR GREEN
16	3FV–12153–20	LIFTER, VALVE	8					UR BLUE
	3FV–12153–09	LIFTER, VALVE (O/S)	8					UR GREEN

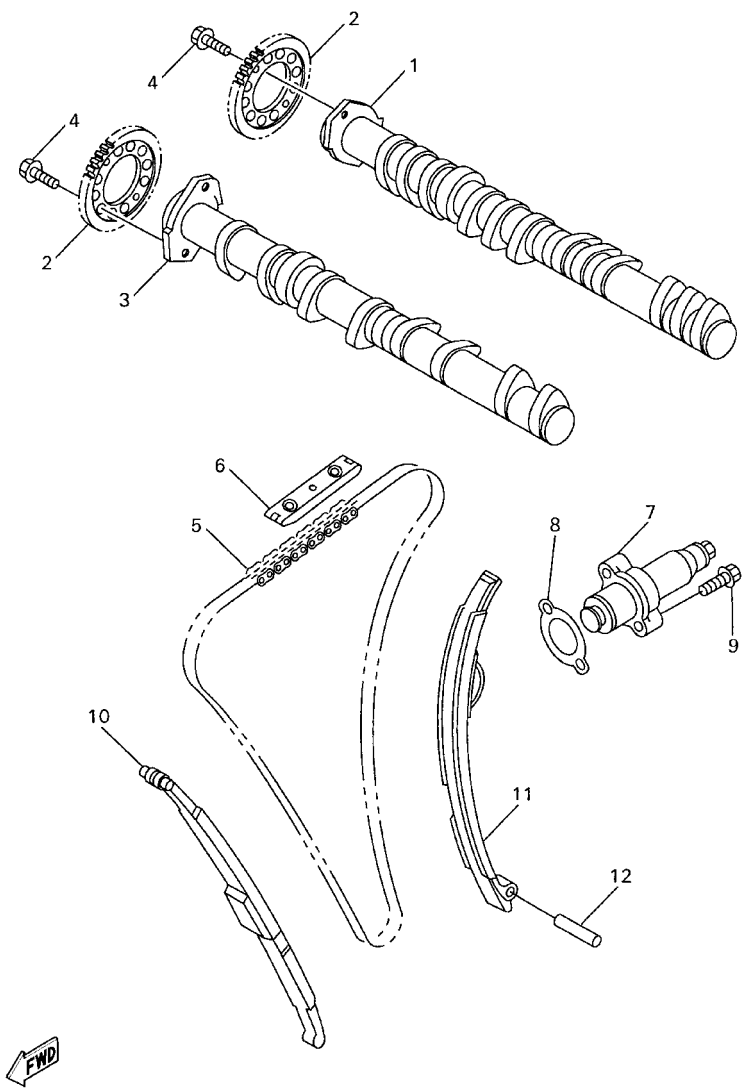

4XV352-8040

FIG. 4 CAMSHAFT. CHAIN

REF. NO.	PART NO.	DESCRIPTION	5JJ1					REMARKS
1	5JJ–12171–00	CAMSHAFT 1	1					
2	4XV–12176–00	SPROCKET, CAM CHAIN	2					
3	5JJ–12181–00	CAMSHAFT 2	1					
4	90105–07342	BOLT, WASHER BASED	4					
5	94591–49130	CHAIN	1					
6	5BE–12241–00	GUIDE, STOPPER 2	1					
7	4XV–12210–00	TENSIONER ASSY, CAM CHAIN	1					
8	4FM–12213–00	GASKET, TENSIONER CASE	1					
9	95027–06025	BOLT, FLANGE	2					
10	4XV–12251–00	DAMPER, CHAIN 1	1					
11	4XV–12252–00	DAMPER, CHAIN 2	1					
12	93607–44190	PIN, DOWEL	1					

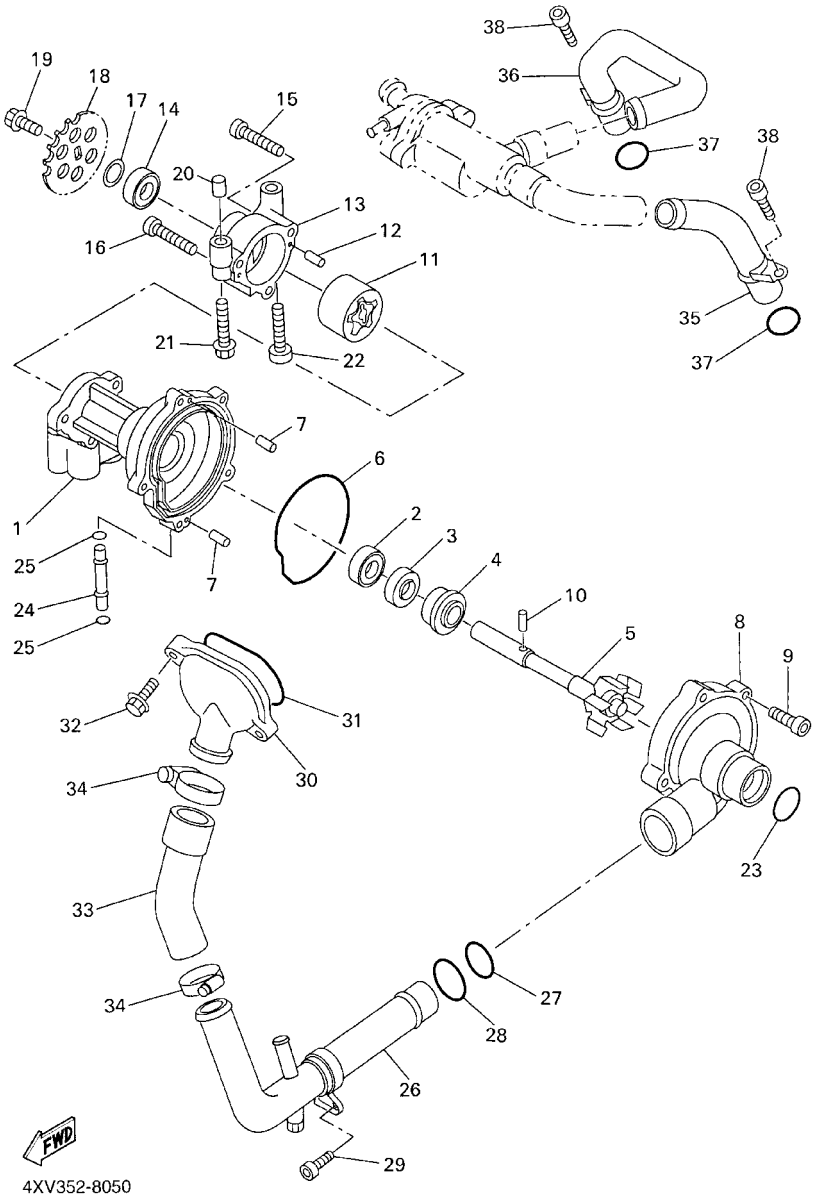

FIG. 5 WATER PUMP

REF. NO.	PART NO.	DESCRIPTION	5JJ1					REMARKS
1	4XV–12421–00	HOUSING, WATER PUMP	1					
2	93306–00106	BEARING	1					
3	93102–12372	OIL SEAL	1					
4	11H–12438–00	SEAL, MECHANICAL	1					
5	4XV–12450–00	IMPELLER SHAFT ASSY	1					
6	4XV–12439–00	O–RING	1					
7	93604–10011	PIN, DOWEL	2					
8	4XV–12422–00	COVER, HOUSING	1					
9	91317–06025	BOLT	5					
10	93603–17070	PIN, DOWEL	1					
11	4XV–13310–00	ROTOR ASSY 1	1					
12	93603–12007	PIN, DOWEL	2					
13	4XV–13336–00	HOUSING, ROTOR	1					
14	93306–00106	BEARING	1					
15	91317–06035	BOLT	2					
16	91317–06040	BOLT	1					
17	90201–12541	WASHER, PLATE	1					
18	4XV–13355–00	SPROCKET, DRIVEN	1					
19	90105–06154	BOLT, WASHER BASED	1					
20	91808–30031	PIN, DOWEL	1					
21	95817–06045	BOLT, FLANGE	1					
22	91317–06045	BOLT	1					
23	93210–357A2	O–RING	1					
24	4XV–12485–00	PIPE 5	1					
25	93210–06667	O–RING	2					
26	5JJ–12481–00	PIPE 1	1					
27	93210–235A1	O–RING	1					

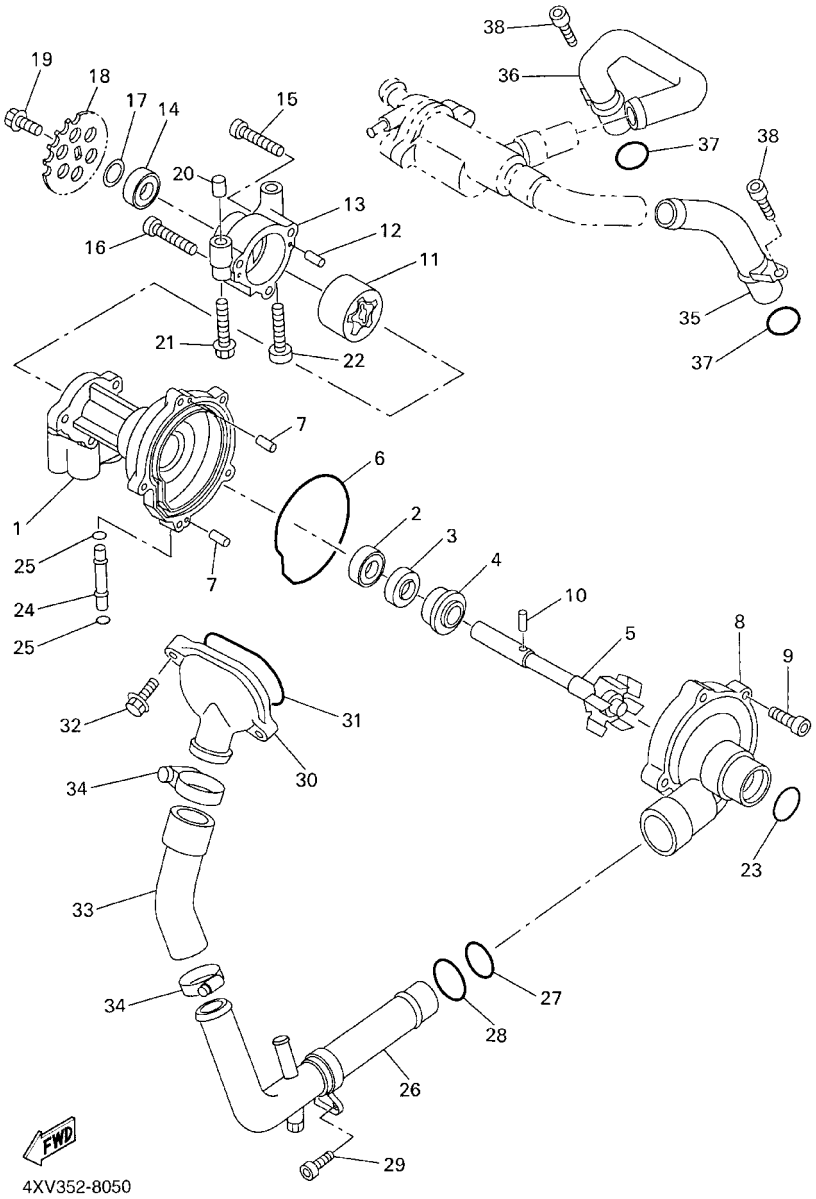

FIG. 5 WATER PUMP

REF. NO.	PART NO.	DESCRIPTION	5JJ1					REMARKS
28	93210–27370	O–RING	1					
29	90110–06226	BOLT, HEXAGON SOCKET HEAD	1					
30	5JJ–12469–00	JOINT 1	1					
31	93210–47675	O–RING	1					
32	95027–06020	BOLT, FLANGE	2					
33	5JJ–12576–00	HOSE 1	1					
34	90450–38040	HOSE CLAMP ASSY	2					
35	4XV–12482–00	PIPE 2	1					
36	4XV–12483–00	PIPE 3	1					
37	93210–18417	O–RING	2					
38	91317–06016	BOLT	2					

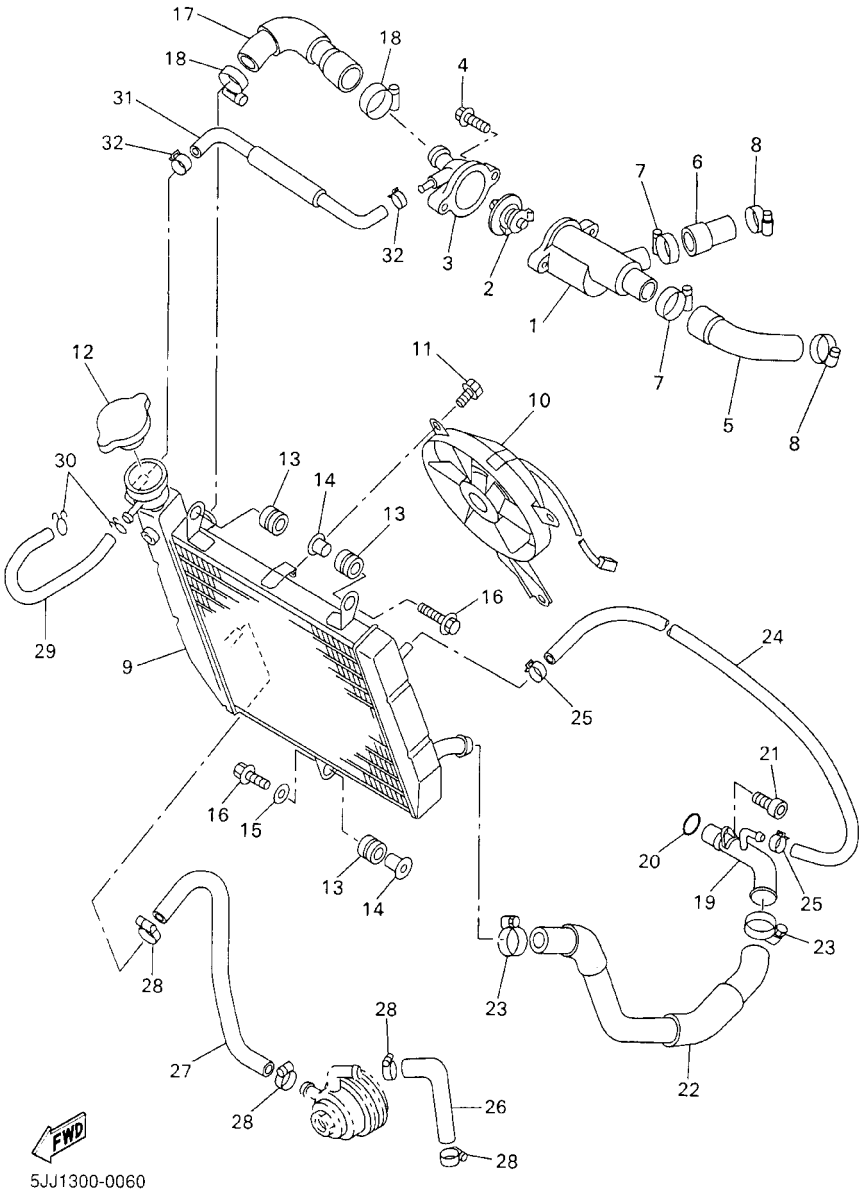

FIG. 6 RADIATOR. HOSE

REF. NO.	PART NO.	DESCRIPTION	5JJ1					REMARKS
1	4XV–12417–00	HOUSING, THERMOSTAT	1					
2	4FM–12410–00	THERMOSTAT ASSY	1					
3	4XV–12413–00	COVER, THERMOSTAT	1					
4	95027–06025	BOLT, FLANGE	2					
5	4XV–12577–00	HOSE 2	1					
6	4XV–12578–00	HOSE 3	1					
7	90450–32015	HOSE CLAMP ASSY	2					
8	90450–28014	HOSE CLAMP ASSY	2					
9	5JJ–12461–00	RADIATOR ASSY	1					
10	4XV–12405–00	BLOWER ASSY	1					
11	95817–06010	BOLT, FLANGE	6					
12	4JH–12462–00	CAP, RADIATOR	1					
13	90480–15363	GROMMET	3					
14	90387–07391	COLLAR	2					
15	90201–06071	WASHER, PLATE	1					
16	95827–06025	BOLT, FLANGE	2					
17	4XV–12579–00	HOSE 4	1					
18	90450–38040	HOSE CLAMP ASSY	2					
19	4XV–12484–00	PIPE 4	1					
20	93210–23787	O–RING	1					
21	90110–06226	BOLT, HEXAGON SOCKET HEAD	1					
22	4XV–12551–00	HOSE 7	1					
23	90450–38040	HOSE CLAMP ASSY	2					
24	4XV–1243A–00	HOSE 1	1					
25	90467–11090	CLIP	2					
26	5JJ–12588–00	HOSE 5	1					
27	5JJ–12589–00	HOSE 6	1					

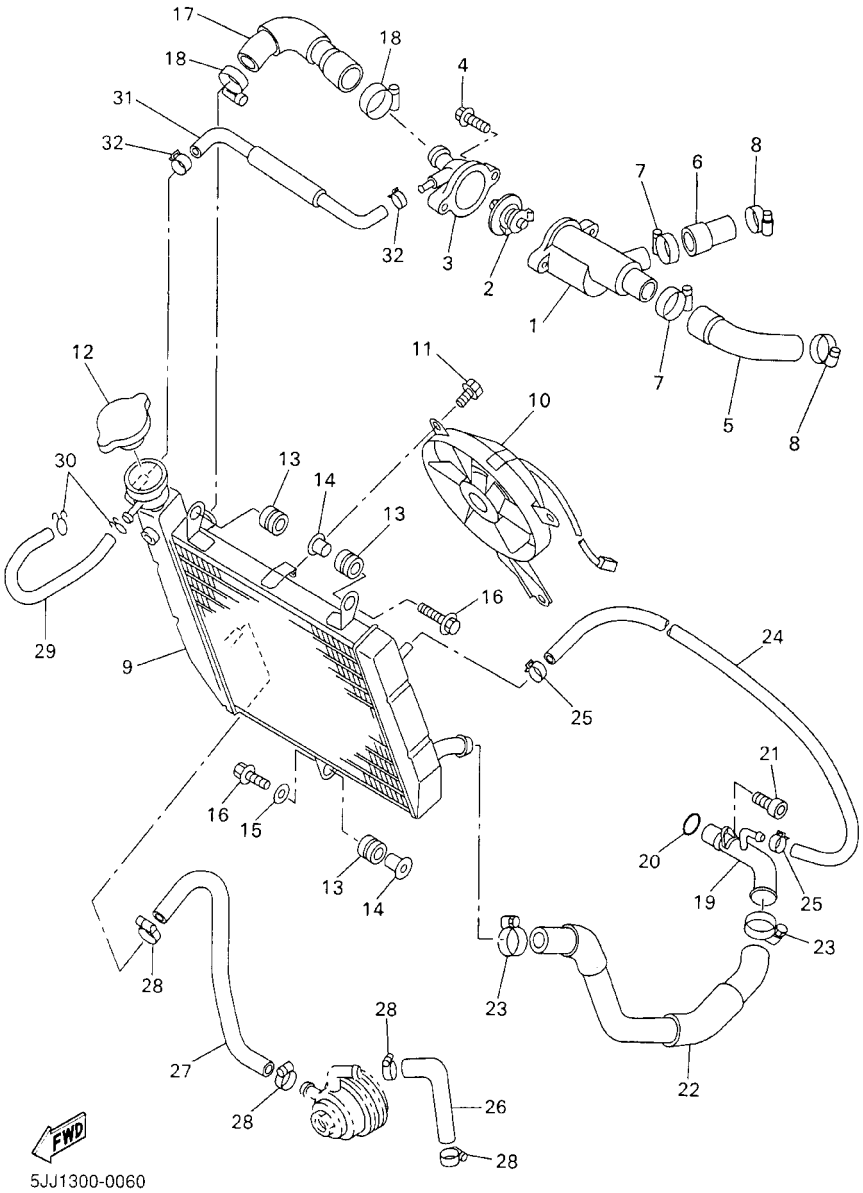

FIG. 6 RADIATOR. HOSE

REF. NO.	PART NO.	DESCRIPTION	5JJ1					REMARKS
28	90450–22017	HOSE CLAMP ASSY	4					
29	90445–09074	HOSE	1					
30	90467–08003	CLIP	2					
31	4XV–12552–00	HOSE 8	1					
32	90467–11090	CLIP	2					

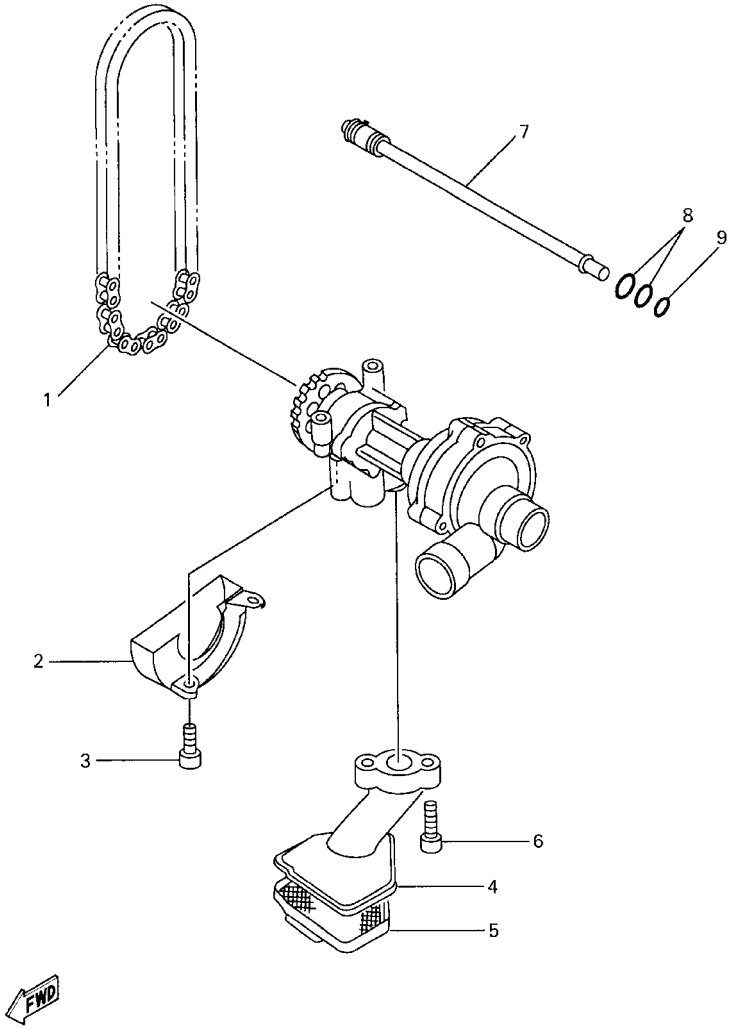

FIG. 7 OIL PUMP

REF. NO.	PART NO.	DESCRIPTION	5JJ1					REMARKS
1	94580–25078	CHAIN (DID25 78LE)	1					
2	4XV–13327–00	COVER, PUMP GEAR	1					
3	91317–06012	BOLT	1					
4	4XV–13412–00	HOUSING, STRAINER	1					
5	4XV–13411–00	STRAINER, OIL	1					
6	91317–06020	BOLT	2					
7	5JJ–1316E–00	PIPE, DELEVERY 5	1					
8	93210–09165	O–RING	2					
9	93210–06667	O–RING	1					

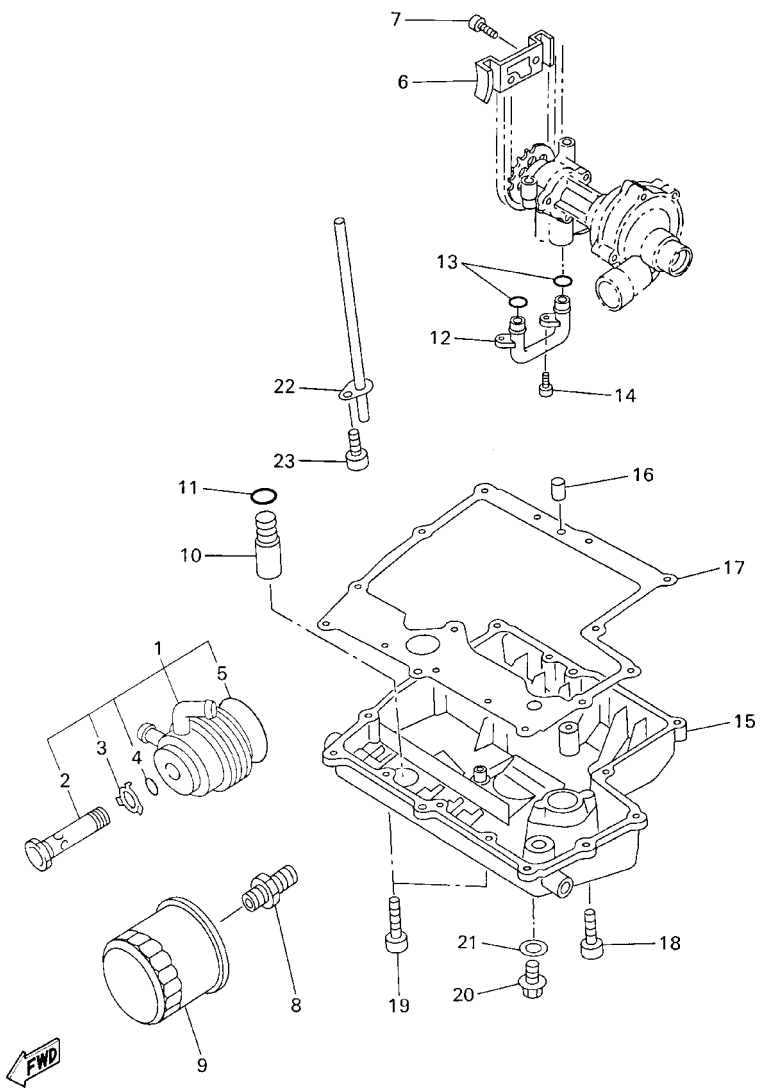

4XV352-8081

FIG. 8 OIL CLEANER

REF. NO.	PART NO.	DESCRIPTION	5JJ1					REMARKS
1	5JJ–13470–00	OIL COOLER ASSY	1					
2	4XV–12822–00	.BOLT, UNION	1					
3	4XV–13473–00	.O–RING	1					
4	4XV–13318–00	.WASHER	1					
5	4XV–13475–00	.GASKET	1					
6	4XV–13898–00	HOLDER	1					
7	91317–06012	BOLT	1					
8	90401–20145	BOLT, UNION	1					
9	5GH–13440–00	ELEMENT ASSY, OIL CLEANER	1					
10	4XV–13490–00	RELIEF VALVE ASSY	1					
11	93210–15566	O–RING	1					
12	4XV–13416–00	PIPE, OIL 1	1					
13	93210–14579	O–RING	2					
14	91317–06012	BOLT	2					
15	4XV–13417–01	COVER, STRAINER	1					
16	99530–08012	PIN, DOWEL	2					
17	4XV–13414–00	GASKET, STRAINER COVER	1					
18	91317–06025	BOLT	13					
19	90110–06225	BOLT, HEXAGON SOCKET HEAD	2					
20	90340–14132	PLUG, STRAIGHT SCREW	1					
21	214–11198–01	GASKET	1					
22	5JJ–13161–00	PIPE, DELIVERY 1	1					
23	91317–06012	BOLT	1					

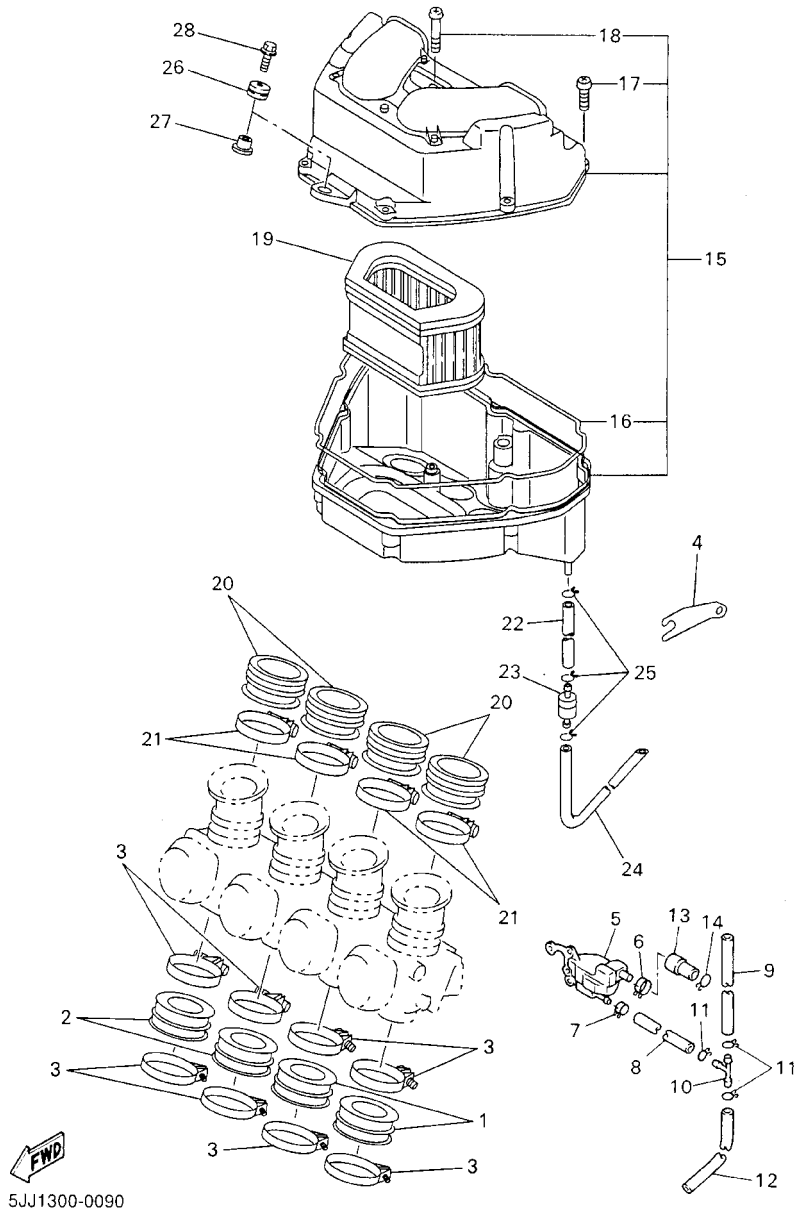

FIG. 9 INTAKE

REF. NO.	PART NO.	DESCRIPTION	5JJ1					REMARKS
1	4XV–13597–00	JOINT, CARBURETOR 3	2					
2	4XV–13598–00	JOINT, CARBURETOR 4	2					
3	90450–57044	HOSE CLAMP ASSY	8					
4	4XV–14414–00	STAY 2	1					
5	5JJ–1446A–00	SURGE TANK ASSY	1					
6	90467–16098	CLIP	1					
7	90467–11090	CLIP	1					
8	90445–11730	HOSE	1					
9	90445–10143	HOSE	1					
10	90413–07007	WAY 3	1					
11	90467–10041	CLIP	3					
12	90445–117K0	HOSE	1					
13	5JJ–14294–00	HOSE	1					
14	90467–13042	CLIP	1					
15	5JJ–14401–00	AIR CLEANER CASE ASSY	1					
16	4XV–14452–00	.SEAL	1					
17	98507–05025	.SCREW, PAN HEAD	7					
18	98507–05045	.SCREW, PAN HEAD	1					
19	4XV–14451–00	ELEMENT, AIR CLEANER	1					
20	5JJ–14453–00	JOINT, AIR CLEANER 1	4					
21	90450–75083	HOSE CLAMP ASSY	4					
22	90445–11452	HOSE	1					
23	4X7–2149Y–00	FILTER ASSY	1					
24	90445–11013	HOSE	1					
25	90467–10041	CLIP	3					
26	90480–12314	GROMMET	1					
27	90387–065J6	COLLAR	1					

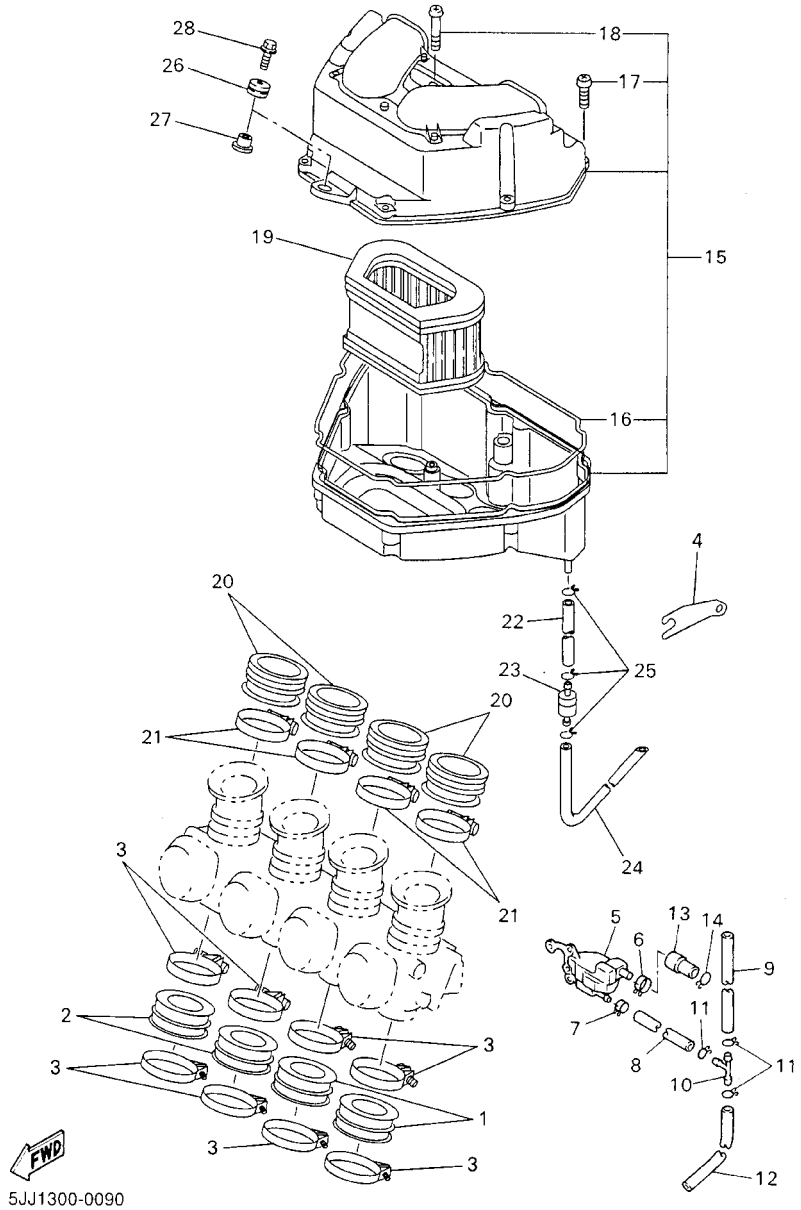

FIG. 9 INTAKE

REF. NO.	PART NO.	DESCRIPTION	5JJ1					REMARKS
28	95817–06020	BOLT, FLANGE	1					

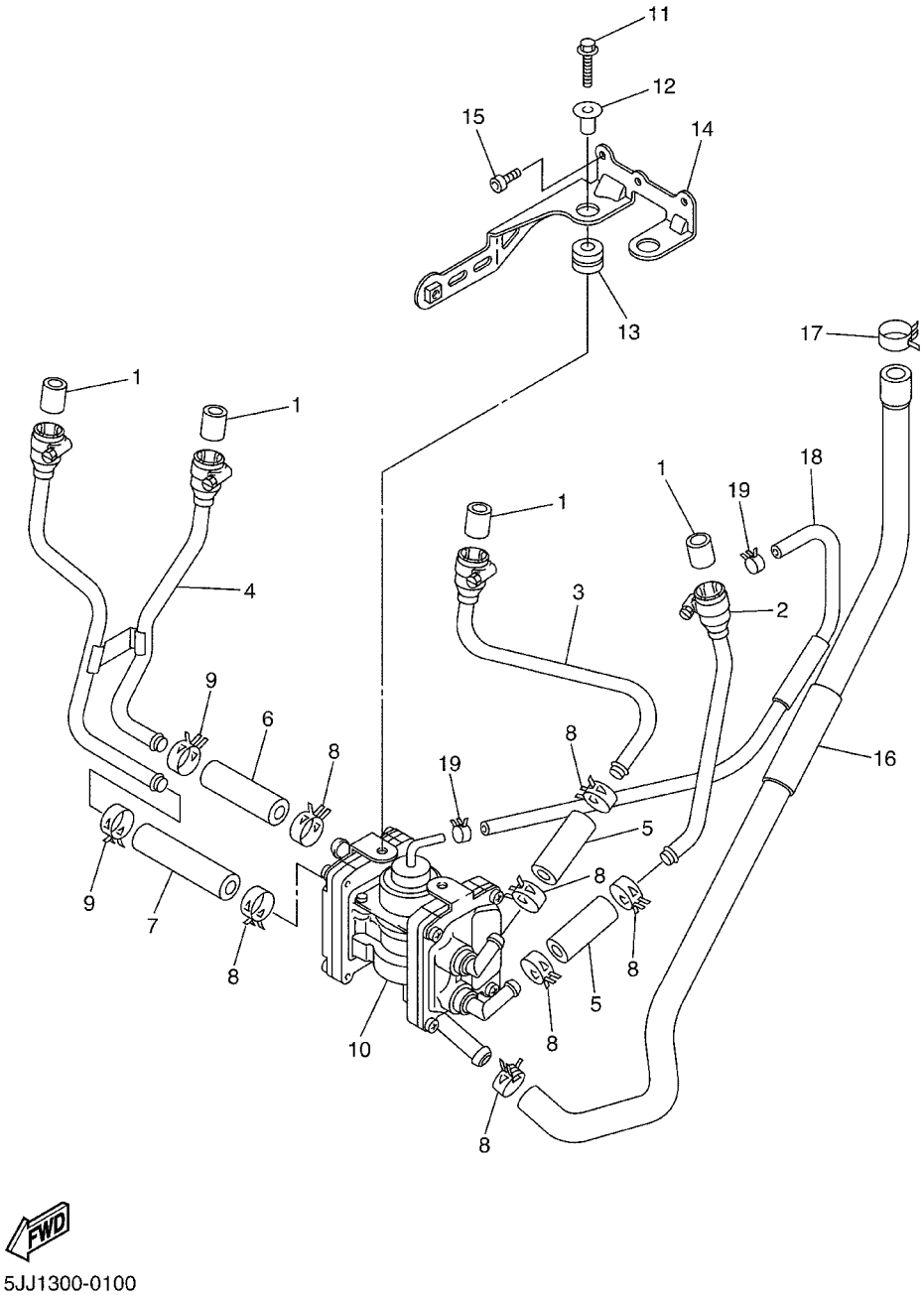

FIG. 10 AIR INDUCTION SYSTEM

REF. NO.	PART NO.	DESCRIPTION	5JJ1					REMARKS
1	4KM–14714–01	GASKET, MUFFLER	4					
2	5JJ–14872–00	PIPE 2	1					
3	5JJ–14873–00	PIPE 3	1					
4	5JJ–14874–00	PIPE 4	1					
5	5JJ–14882–00	HOSE, BEND 2	2					
6	5JJ–14883–00	HOSE, BEND 3	1					
7	5JJ–14886–00	HOSE, BEND 6	1					
8	90467–15054	CLIP	7					
9	90467–15001	CLIP	2					
10	5JJ–14803–00	AIR INDUCTION SYSTEM ASSY	1					
11	95827–06020	BOLT, FLANGE	2					
12	90387–07391	COLLAR	2					
13	90480–15316	GROMMET	2					
14	5JJ–14867–00	BRACKET	1					
15	91317–06012	BOLT	3					
16	5JJ–14881–00	HOSE, BEND 1	1					
17	90467–17089	CLIP	1					
18	5JJ–14884–00	HOSE, BEND 4	1					
19	90467–08092	CLIP	2					

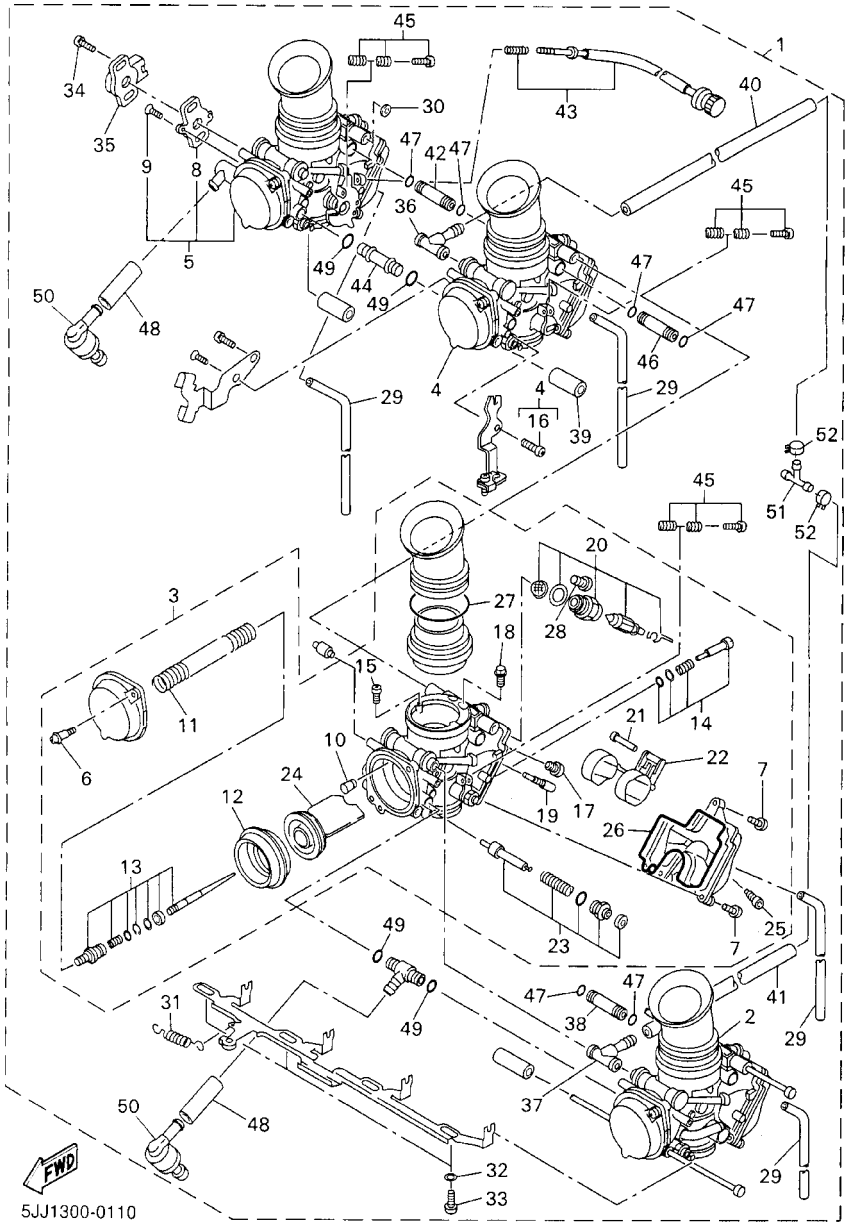

FIG. 11 CARBURETOR

REF. NO.	PART NO.	DESCRIPTION	5JJ1					REMARKS
1	5JJ–14900–00	CARBURETOR ASSY	1					
2	5JJ–14901–00	.CARBURETOR ASSY 1	1					
3	5JJ–14902–00	.CARBURETOR ASSY 2	1					
4	5JJ–14903–00	.CARBURETOR ASSY 3	1					
5	5JJ–14904–00	.CARBURETOR ASSY 4	1					
6	4KM–14216–00	..SCREW	2					
7	98507–05012	..SCREW, PAN HEAD	3					
8	4KG–14995–00	..BRACKET	1					
9	98707–04008	..SCREW, FLAT HEAD	2					
10	4SV–14968–00	..CAP	1					
11	4SV–14933–00	..SPRING, DIAPHRAGM	1					
12	4SV–24411–00	..DIAPHRAGM	1					
13	4XV–1490J–00	..NEEDLE SET	1					
14	4SV–14105–00	..PILOT SCREW SET	1					
15	4SV–14216–00	..SCREW	2					
16	98507–05010	..SCREW, PAN HEAD	1					
17	3G2–14231–26	..JET, MAIN (#130)	1					
18	8CC–14232–24	..JET, AIR (#120)	1					
19	4KM–14142–15	..JET, PILOT (# 15)	1					
20	4KM–14107–15	..NEEDLE VALVE SET	1					
21	620–14186–00	..PIN, FLOAT	1					
22	4SV–14985–00	..FLOAT	1					
23	4SV–1410A–00	..STARTER SET	1					
24	4SV–14112–00	..VALVE, THROTTLE 1	1					
25	4KP–14191–00	..PLUG, DRAIN	1					
26	4XV–14562–00	..O–RING	1					
27	4XV–14275–00	..SPRING	1					

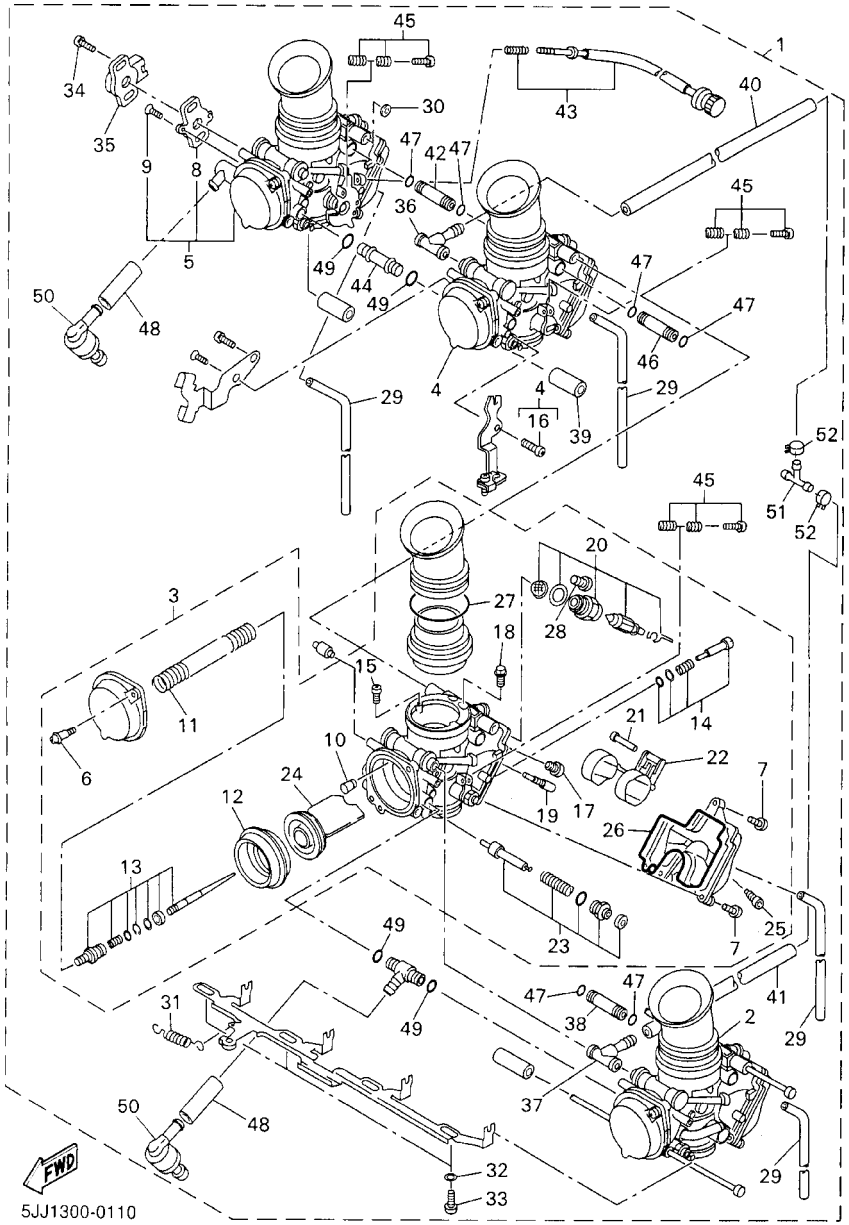

FIG. 11 CARBURETOR

REF. NO.	PART NO.	DESCRIPTION	5JJ1					REMARKS
28	1FN–14565–00	..SCREW	1					
29	3JE–14197–00	.PIPE	4					
30	28V–14952–00	.WASHER	1					
31	4SV–14935–00	.SPRING	1					
32	4NK–14327–00	.PACKING	3					
33	4XV–24453–00	.SCREW	3					
34	4KM–24453–00	.SCREW	2					
35	4SV–85885–00	.THROTTLE POSITION SENSOR ASSY	1					
36	4SV–14987–00	.HOSE	1					
37	4XV–90445–00	.HOSE	1					
38	4XV–14149–30	.PIPE	1					
39	4XV–14149–60	.PIPE	1					
40	4YW–14987–00	.HOSE	1					
41	5JJ–14987–00	.HOSE	1					
42	4XV–14149–40	.PIPE	1					
43	4XV–14103–00	.THROTTLE SCREW SET	1					
44	4XV–14149–90	.PIPE	1					
45	3EN–1490K–00	.STOP SCREW SET	3					
46	4XV–14149–70	.PIPE	1					
47	36Y–14147–00	.O–RING	6					
48	3LN–14348–00	.PIPE 1	2					
49	3LN–1416A–00	.O–RING	4					
50	3LN–24515–00	.NET, FILTER 2	2					
51	90413–10016	.WAY 3	1					
52	90467–11090	.CLIP	2					

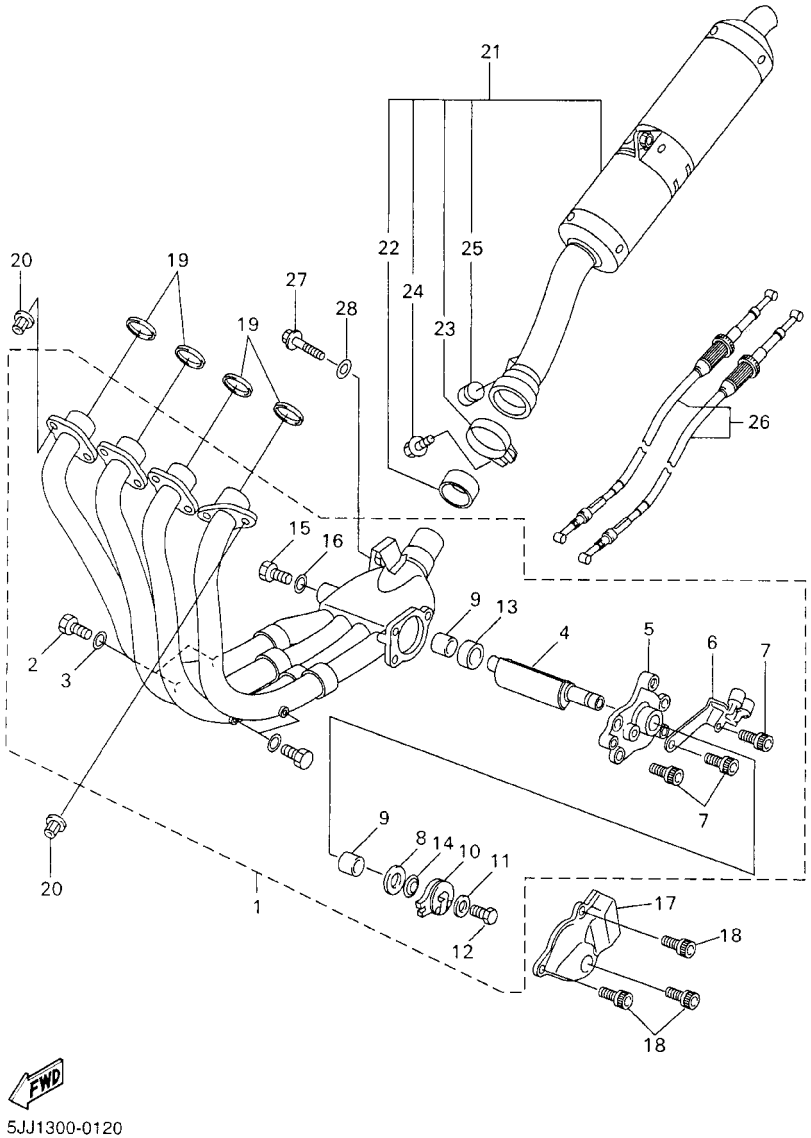

5JJ1300-0120

FIG. 12 EXHAUST

REF. NO.	PART NO.	DESCRIPTION	5JJ1					REMARKS
1	5JJ–14610–00	EXHAUST PIPE ASSY 1	1					
2	97080–06008	.BOLT	4					
3	92990–06600	.WASHER, PLATE	4					
4	4SV–14821–00	.ARM, SHAFT (VALVE)	1					
5	5JJ–14811–00	.HOUSING	1					
6	2TK–14867–01	.BRACKET	1					
7	90119–06115	.BOLT, WITH WASHER	3					
8	90201–106M5	.WASHER, PLATE	1					
9	4SV–14638–00	.COLLAR	2					
10	2TK–14865–01	.PULLEY	1					
11	90201–050T4	.WASHER, PLATE	1					
12	97080–05012	.BOLT	1					
13	90387–106U7	.COLLAR	1					
14	3GM–14683–00	.SPRING, HOOK	1					
15	91380–04006	.BOLT	2					
16	92990–04600	.WASHER, PLATE	2					
17	4HD–14826–00	PROTECTOR, EXHAUST	1					
18	90119–06187	BOLT, WITH WASHER	3					
19	4FM–14613–00	GASKET, EXHAUST PIPE	4					
20	90179–08410	NUT	8					
21	5JJ–14710–00	MUFFLER ASSY 1	1					
22	4XV–14714–00	.GASKET, MUFFLER	1					
23	5JJ–14715–00	.BAND, MUFFLER	1					
24	95817–08025	.BOLT, FLANGE	1					
25	4FM–24181–00	.DAMPER, LOCATING 1	1					
26	4XV–1130E–00	CABLE PULLEY ASSY	1					
27	95817–08040	BOLT, FLANGE	1					

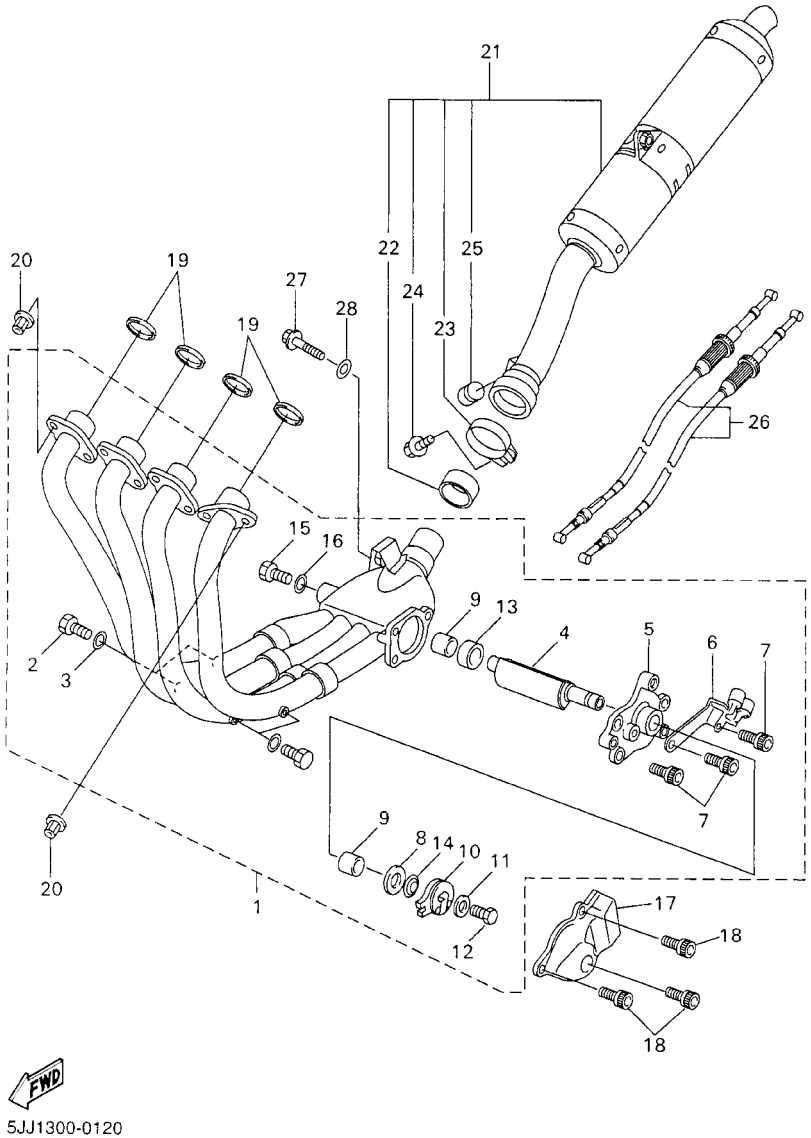

FIG. 12 EXHAUST

REF. NO.	PART NO.	DESCRIPTION	5JJ1					REMARKS
28	90201–08612	WASHER, PLATE	1					

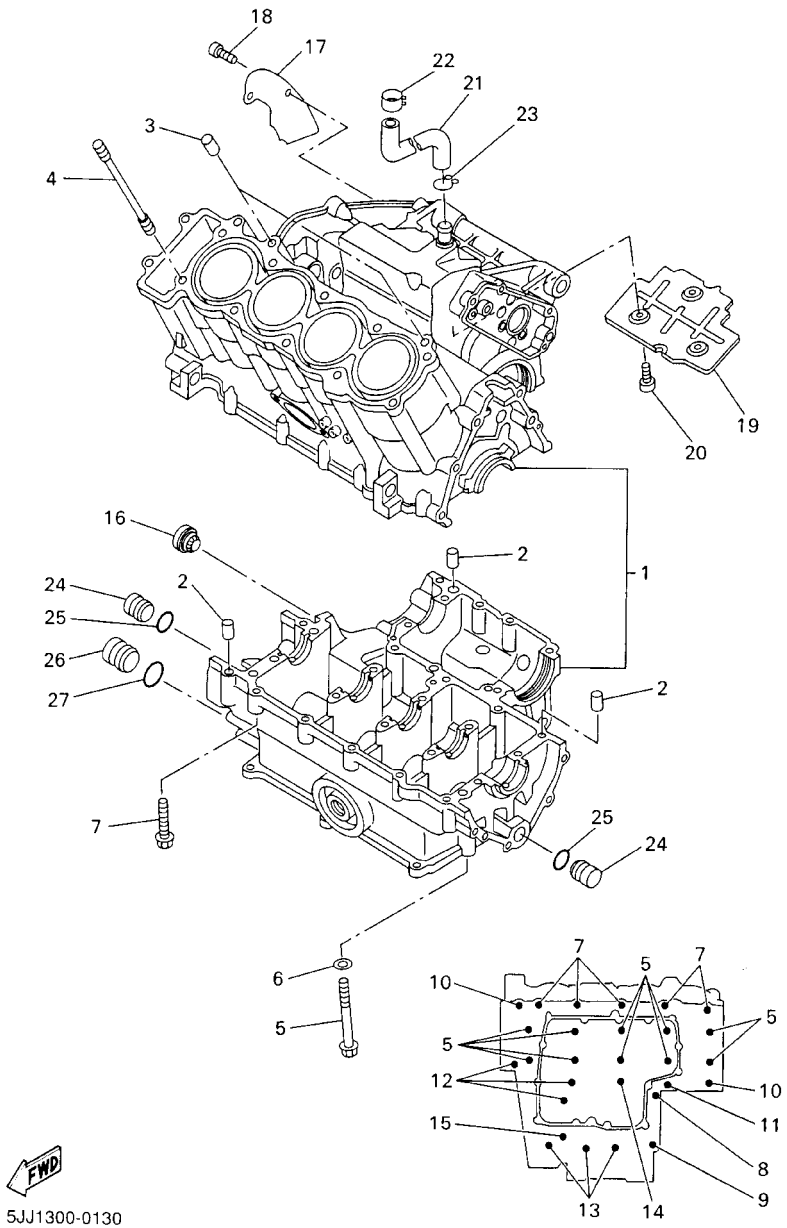

FIG. 13 CRANKCASE

REF. NO.	PART NO.	DESCRIPTION	5JJ1					REMARKS
1	5JJ–15100–00	CRANKCASE ASSY	1					
2	99530–10014	PIN, DOWEL	3					
3	99530–10114	PIN, DOWEL	2					
4	90116–10619	BOLT, STUD	10					
5	90105–093A5	BOLT, WASHER BASED	10					
6	90201–096J9	WASHER, PLATE	10					
7	95817–06055	BOLT, FLANGE	5					
8	90105–08015	BOLT, WASHER BASED	1					
9	95817–08050	BOLT, FLANGE	1					
10	90109–065G3	BOLT	2					
11	95817–06060	BOLT, FLANGE	1					
12	95817–06070	BOLT, FLANGE	3					
13	95817–06045	BOLT, FLANGE	3					
14	95814–06050	BOLT, FLANGE	1					
15	95817–06065	BOLT, FLANGE	1					
16	2H7–15361–00	GAUGE, LEVEL	1					
17	4XV–11165–00	PLATE, BREATHER	1					
18	91317–06012	BOLT	2					
19	4XV–11145–00	PLATE, BREATHER 2	1					
20	91317–06012	BOLT	3					
21	90445–161K7	HOSE	1					
22	90468–08104	CLIP	1					
23	90467–14015	CLIP	1					
24	90338–16262	PLUG	2					
25	93210–12790	O–RING	2					
26	90338–20263	PLUG	1					
27	93210–16314	O–RING	1					

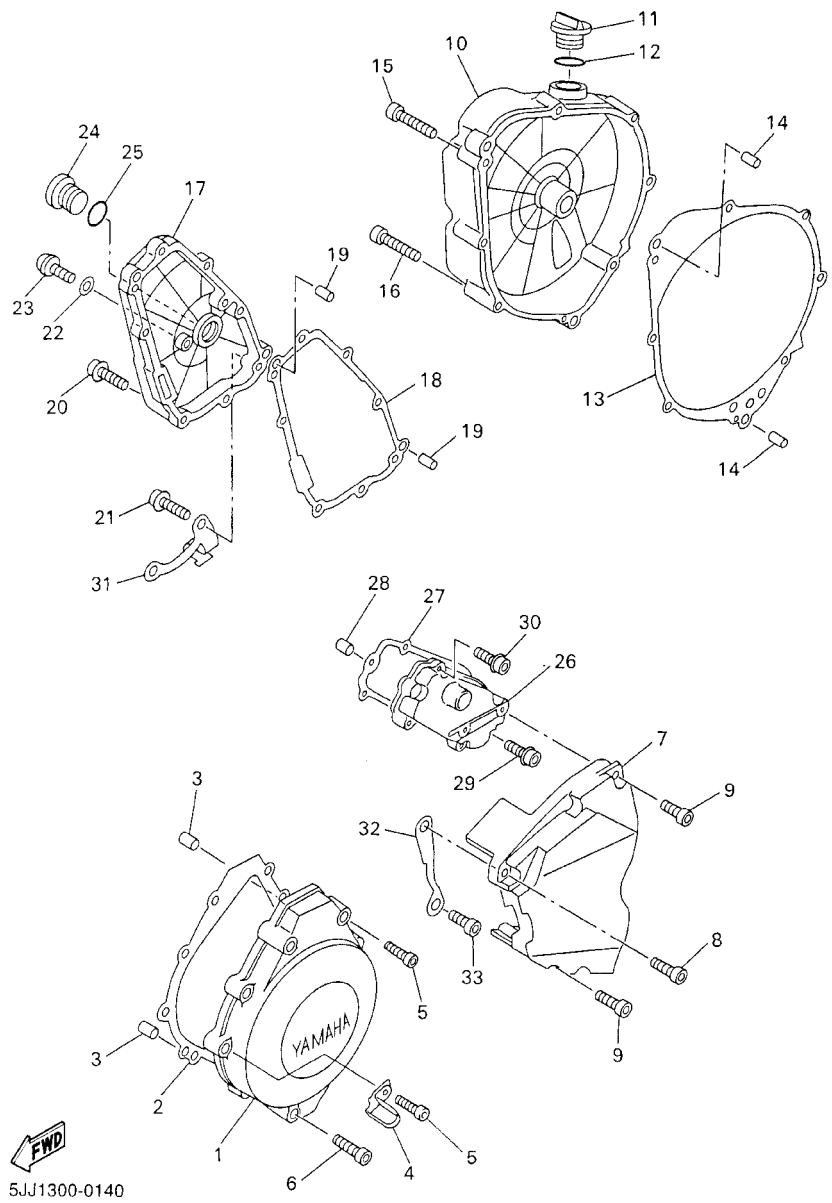

FIG. 14 CRANKCASE COVER 1

REF. NO.	PART NO.	DESCRIPTION	5JJ1					REMARKS
1	4XV–15411–00	COVER, CRANKCASE 1	1					
2	4XV–15451–00	GASKET, CRANKCASE COVER 1	1					
3	99530–08012	PIN, DOWEL	2					
4	90461–10003	CLAMP	1					
5	91314–06035	BOLT	8					
6	91314–06020	BOLT	1					
7	4XV–15418–00	COVER, CHAIN CASE	1					
8	90110–06224	BOLT, HEXAGON SOCKET HEAD	1					
9	91314–06025	BOLT	4					
10	4XV–15421–00	COVER, CRANKCASE 2	1					
11	3F9–15362–00	PLUG, OIL LEVEL	1					
12	93210–27194	O–RING	1					
13	4XV–15461–00	GASKET, CRANKCASE COVER 2	1					
14	90250–08022	PIN, STRAIGHT	2					
15	91314–06040	BOLT	5					
16	91314–06050	BOLT	3					
17	5JJ–15416–00	COVER, OIL PUMP	1					
18	5JJ–15456–00	GASKET, OIL PUMP COVER 1	1					
19	99530–08012	PIN, DOWEL	2					
20	90109–06014	BOLT	4					
21	90109–06015	BOLT	4					
22	90430–08143	GASKET	1					
23	92014–08016	BOLT, BUTTON HEAD	1					
24	90340–32116	PLUG, STRAIGHT SCREW	1					
25	93210–32172	O–RING	1					
26	5JJ–15425–00	COVER, GENERATOR 2	1					
27	5JJ–15463–00	GASKET, CARBURETOR COVER 2	1					

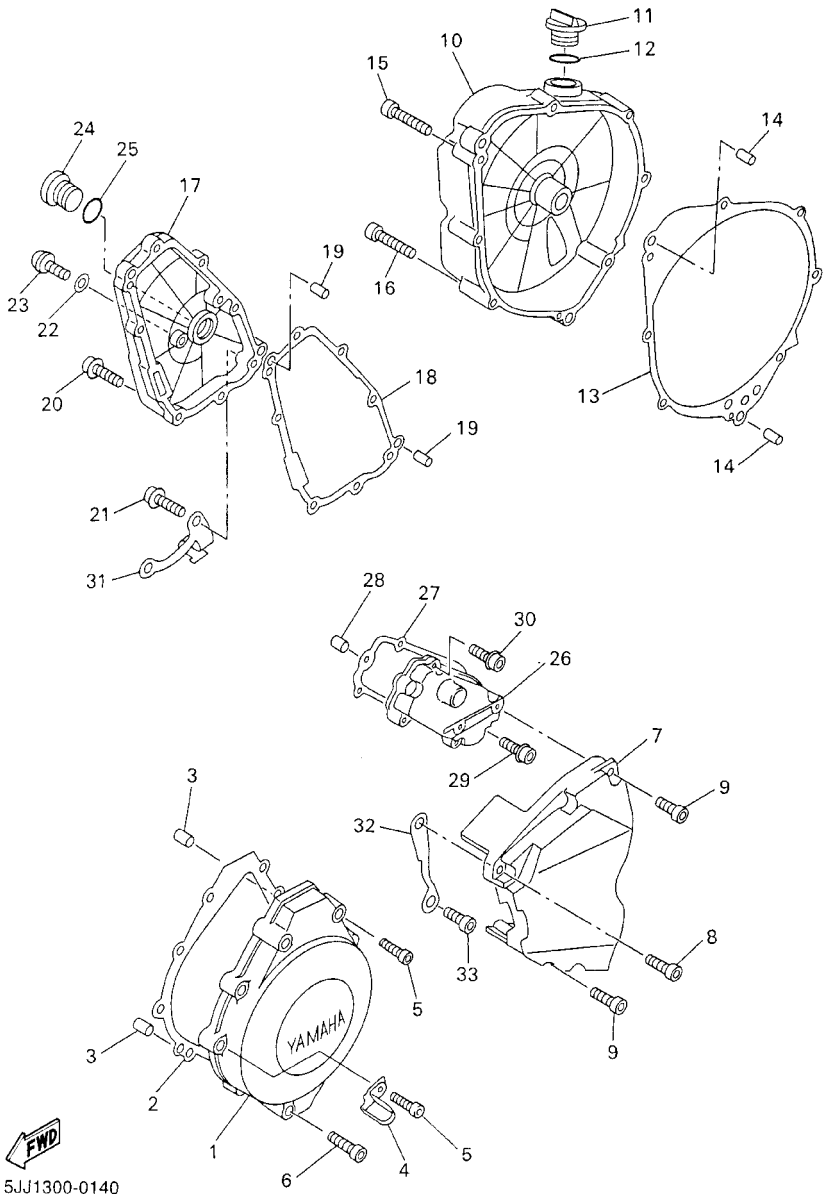

FIG. 14 CRANKCASE COVER 1

REF. NO.	PART NO.	DESCRIPTION	5JJ1					REMARKS
28	99530–08012	PIN, DOWEL	2					
29	90109–06014	BOLT	2					
30	90109–06015	BOLT	3					
31	4XV–15441–00	HOLDER, CLUTCH CABLE	1					
32	4XV–15113–00	PLATE	1					
33	90110–06136	BOLT, HEXAGON SOCKET HEAD	1					

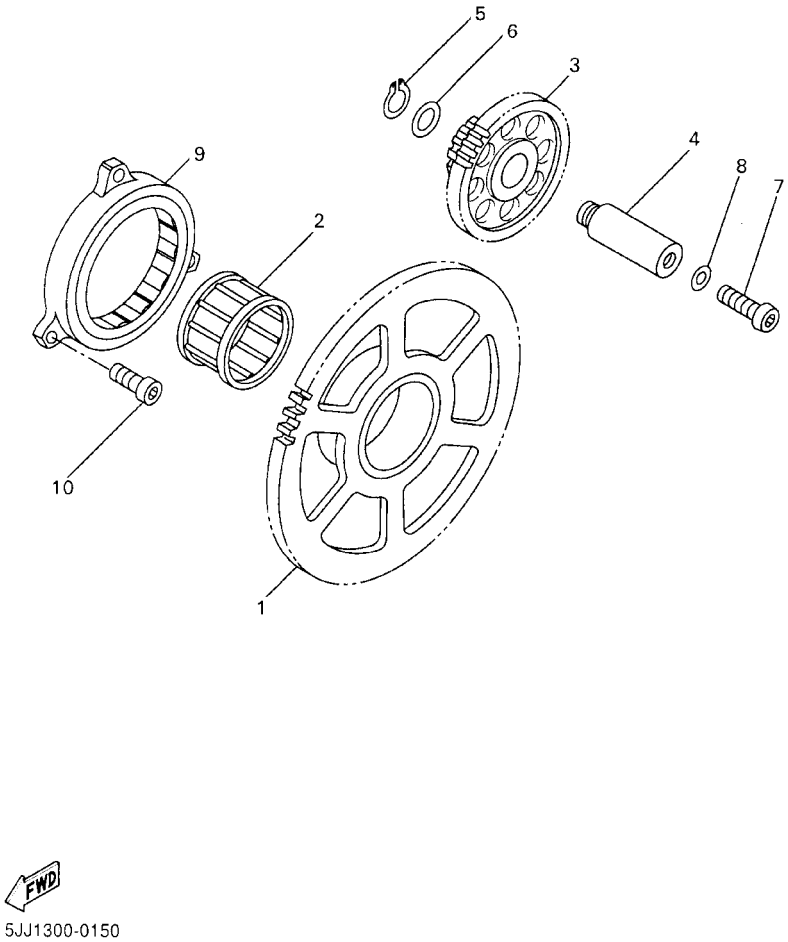

FIG. 15 STARTER

REF. NO.	PART NO.	DESCRIPTION	5JJ1					REMARKS
1	5JJ–15515–00	GEAR 3	1					
2	93310–338S6	BEARING	1					
3	5JJ–15517–00	GEAR, IDLER 2	1					
4	4XV–15521–00	SHAFT 1	1					
5	93410–08072	CIRCLIP	1					
6	90201–08089	WASHER, PLATE	1					
7	92017–06014	BOLT, BUTTON HEAD	1					
8	90430–06014	GASKET	1					
9	4XV–15570–00	STARTER CLUTCH ASSY	1					
10	91317–06010	BOLT	3					

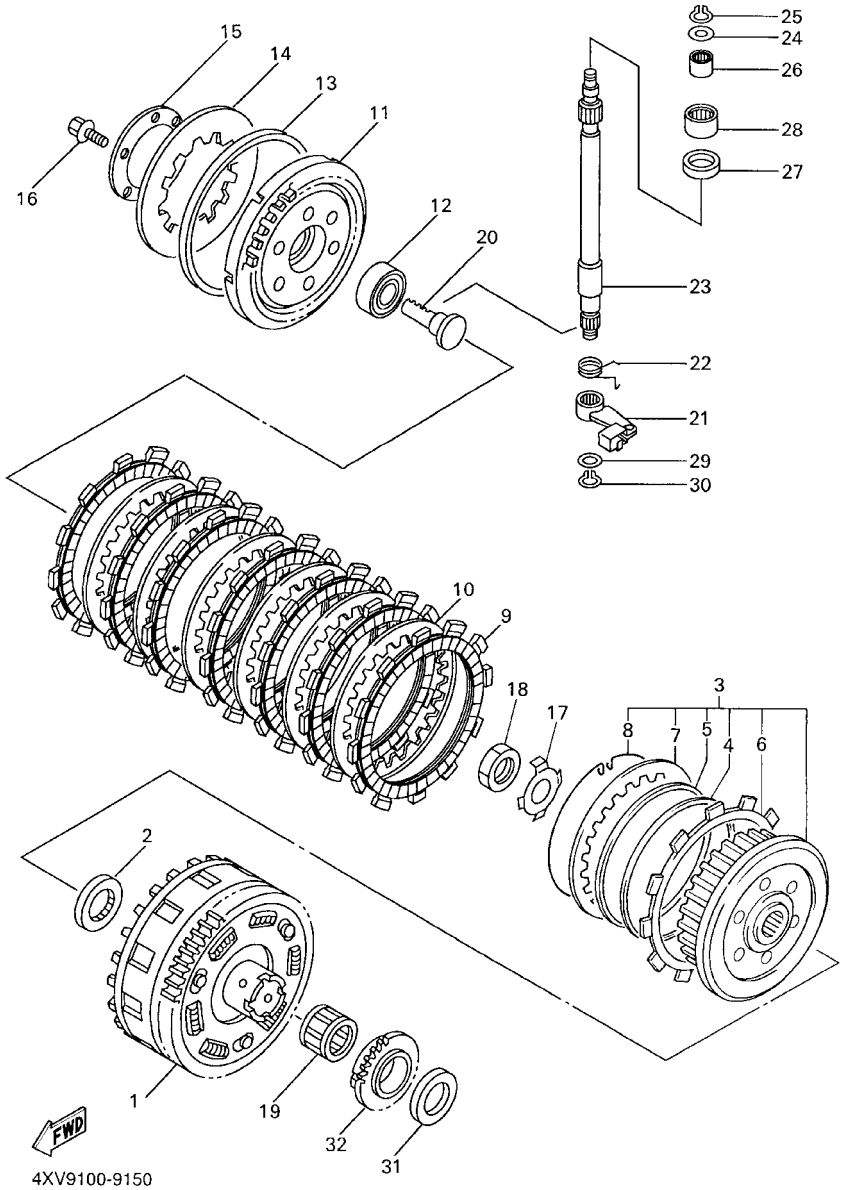

FIG. 16 CLUTCH

REF. NO.	PART NO.	DESCRIPTION	5JJ1					REMARKS
1	4XV–16150–02	PRIMARY DRIVEN GEAR COMP.	1					
2	26H–16154–00	PLATE, THRUST 1	1					
3	4XV–16370–00	CLUTCH BOSS ASSY	1					
4	4XV–16384–00	.PLATE, SEAT	1					
5	36Y–16383–00	.SPRING, CLUTCH BOSS	1					
6	4XV–16331–00	.PLATE, FRICTION 2	1					
7	2H7–16325–00	.PLATE, CLUTCH 2	1					
8	2H7–16385–00	.RING, CLUTCH BOSS	1					
9	341–16321–13	PLATE, FRICTION	7					
10	2H7–16325–00	PLATE, CLUTCH 2	6					
11	4XV–16351–00	PLATE, PRESSURE 1	1					
12	93306–00304	BEARING (B6003C4)	1					
13	36Y–16335–00	HOUSING, SPRING	1					
14	36Y–16334–00	SPRING, CLUTCH 2	1					
15	1TX–16352–00	PLATE, PRESSURE 2	1					
16	95817–06025	BOLT, FLANGE	6					
17	90215–25218	WASHER, LOCK	1					
18	90170–20323	NUT	1					
19	93310–228S5	BEARING	1					
20	4XV–16356–01	ROD, PUSH 1	1					
21	4XV–16340–00	PUSH LEVER ASSY	1					
22	90508–164B2	SPRING, TORSION	1					
23	4XV–16382–00	AXLE, PUSH LEVER	1					
24	92907–08600	WASHER, PLATE	1					
25	99001–07600	CIRCLIP	1					
26	93317–11020	BEARING	1					
27	93102–15212	OIL SEAL	1					

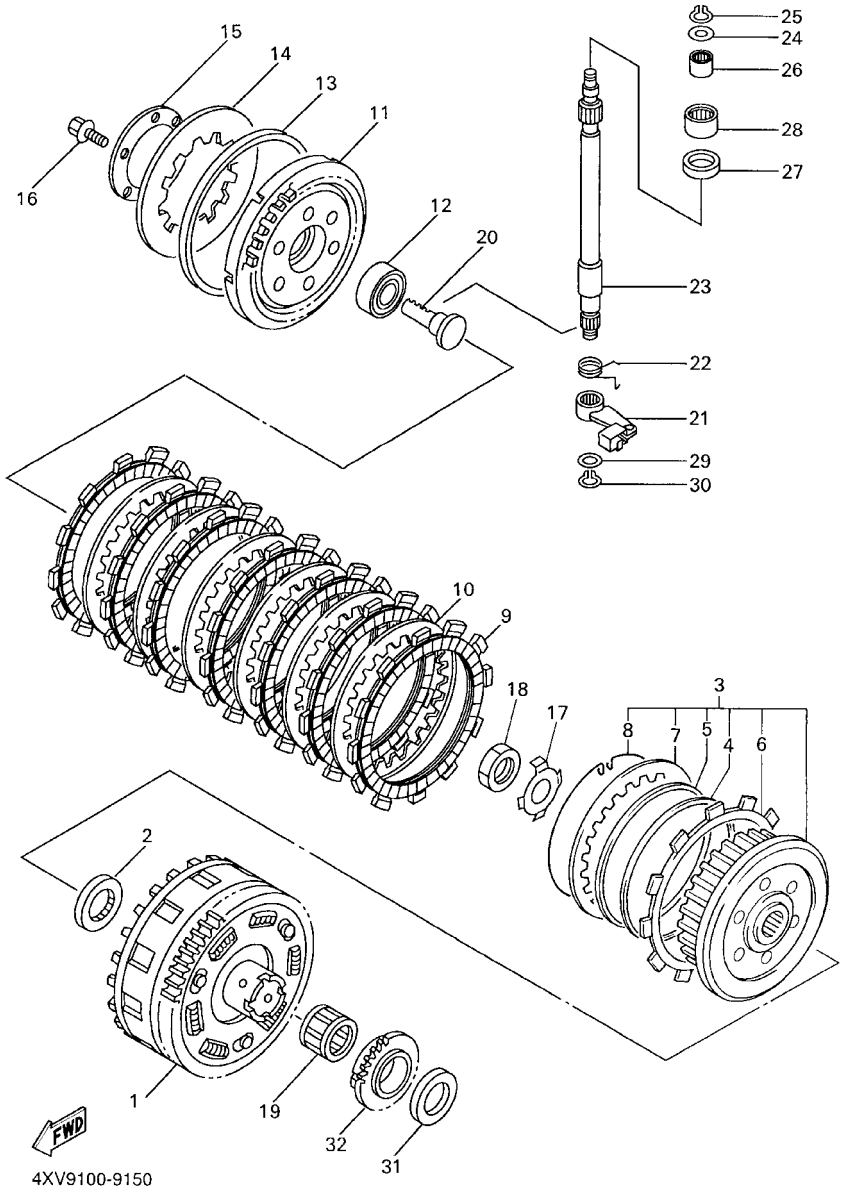

FIG. 16 CLUTCH

REF. NO.	PART NO.	DESCRIPTION	5JJ1					REMARKS
28	93315–31502	BEARING	1					
29	90201–10614	WASHER, PLATE	1					
30	99009–10400	CIRCLIP	1					
31	4XV–16154–00	PLATE, THRUST 1	1					
32	4XV–13354–00	SPROCKET, DRIVE	1					

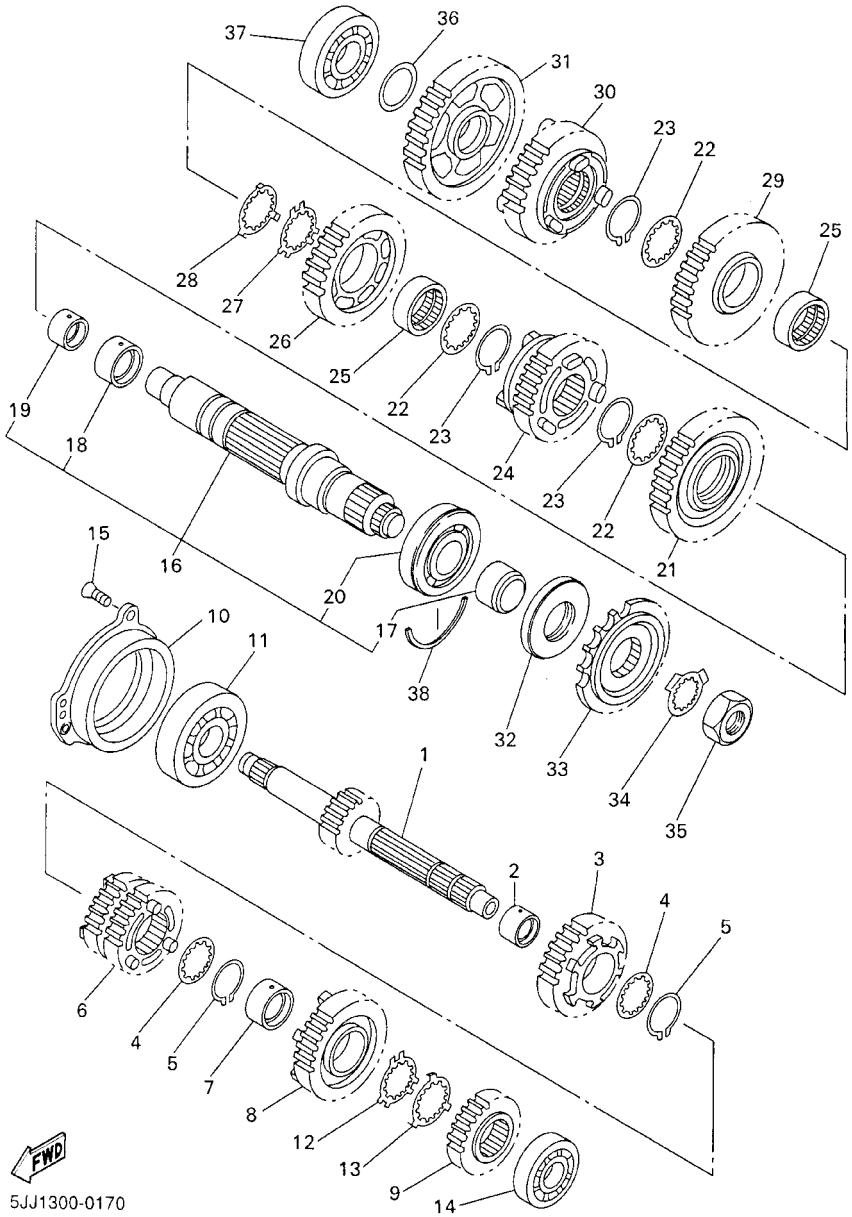

FIG. 17 TRANSMISSION

REF. NO.	PART NO.	DESCRIPTION	5JJ1					REMARKS
1	5JJ–17411–00	AXLE, MAIN	1					
2	90387–2811B	COLLAR	1					
3	5JJ–17151–00	GEAR, 5TH PINION	1					
4	90209–25342	WASHER	2					
5	93440–28062	CIRCLIP	2					
6	5JJ–17131–00	GEAR, 3RD PINION	1					
7	90387–2810U	COLLAR	1					
8	5JJ–17161–00	GEAR, 6TH PINION	1					
9	5JJ–17121–00	GEAR, 2ND PINION	1					
10	5JJ–15163–00	HOUSING, BEARING 1	1					
11	93306–37807	BEARING	1					
12	90209–25349	WASHER	1					
13	90209–25350	WASHER	1					
14	93306–27208	BEARING	1					
15	90149–06286	SCREW	3					
16	5JJ–17402–00	DRIVE AXLE ASSY	1					Go to P/N: PE0-MC-040134
17	5JJ–17158–00	.COLLAR 1	1					Go to P/N: PE0-MC-040134
18	90387–3311C	.COLLAR	1					Go to P/N: PE0-MC-040134
19	90387–2511A	.COLLAR	1					Go to P/N: PE0-MC-040134
20	93306–20705	.BEARING (B6207N)	1					Go to P/N: PE0-MC-040134
21	5JJ–17221–00	GEAR, 2ND WHEEL	1					
22	90209–30344	WASHER	3					
23	93440–32063	CIRCLIP	3					
24	5JJ–17261–00	GEAR, 6TH WHEEL	1					
25	90387–3310V	COLLAR	2					
26	5JJ–17241–00	GEAR, 4TH WHEEL	1					
27	90209–30345	WASHER	1					

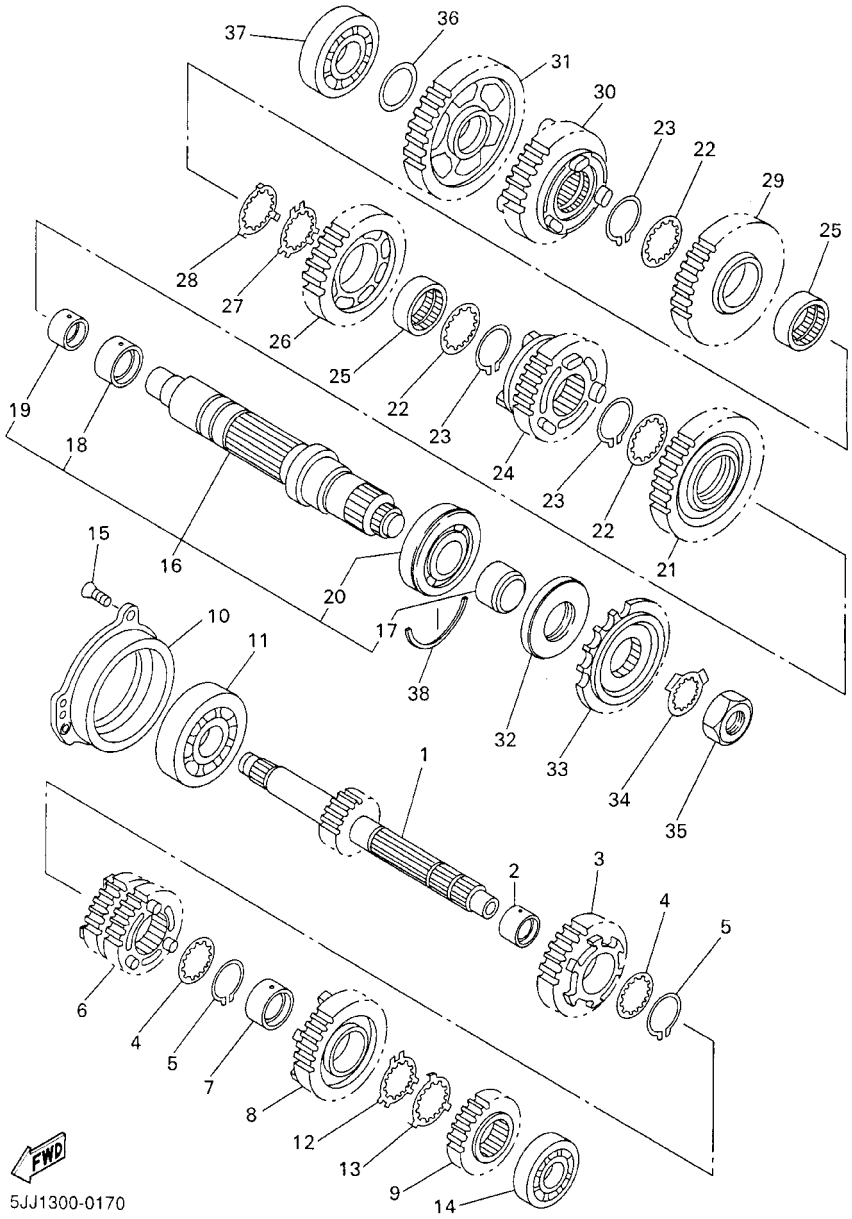

FIG. 17 TRANSMISSION

REF. NO.	PART NO.	DESCRIPTION	5JJ1					REMARKS
28	90209–30343	WASHER	1					
29	5JJ–17231–00	GEAR, 3RD WHEEL	1					
30	5JJ–17251–00	GEAR, 5TH WHEEL	1					
31	5JJ–17211–00	GEAR, 1ST WHEEL	1					
32	93102–45465	OIL SEAL	1					
33	4XV–17460–00	SPROCKET, DRIVE	1					
34	90215–30233	WASHER, LOCK	1					
35	90179–22063	NUT	1					
36	90201–224L4	WASHER, PLATE	1					
37	93306–37209	BEARING	1					
38	93440–72049	CIRCLIP	1					

PARTS NEWS

YAMAHA
YAMAHA MOTOR CO., LTD.
2500 SHINGAI IWATA SHIZUOKA JAPAN

News No M/C-04134

Date: October,19, 2004

Signature: K.Otsuka

Model	YZF-R1 (See the "List of Models and CATALOGUE No's ."of the next page.)
Subject	PARTS CATALOGUE CORRECTIONS
CATALOGUE NO.	See the "List of Models and CATALOGUE No's ."of the next page.

Please make the following corrections to your parts catalogue.

1. LIST CORRECTION

FIG17 TRANSMISSION

Ref.No.	OLD P/No.	NEW P/No.	PARTS NAME	Q'TY	REMARKS
17-16	5JJ-17402-00	←	DRIVE AXLE ASSY	1	
17-17	5JJ-17158-00	←	. COLLAR 1	1	
17-18	90387-3311C	←	. COLLAR	1	
17-19	90387-2511A	←	. COLLAR	1	
17-20	93306-20705	←	. BEARING	1	

Ref.No.	OLD P/No.	NEW P/No.	PARTS NAME	Q'TY	REMARKS
17-16	5JJ-17402-00	←	DRIVE AXLE ASSY	1	
17-17	5JJ-17158-00	←	. COLLAR 1	1	
17-18	93306-20705	←	. BEARING	1	
17-19	90387-3311C	←	COLLAR	1	No longer contained in Ref No.16.
17-20	90387-2511A	←	COLLAR	1	No longer contained in Ref No.16.

2. ILLUSTRATION CORRECTION

Illustration should be read as follows.

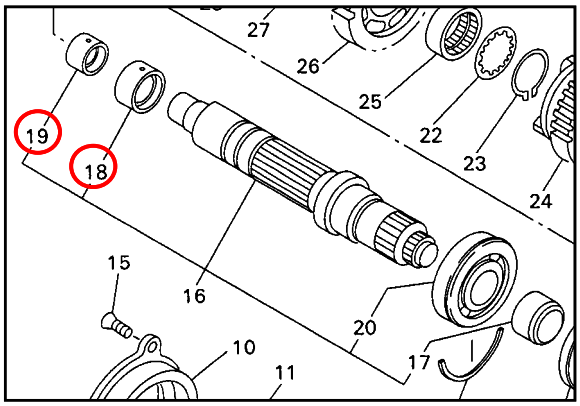

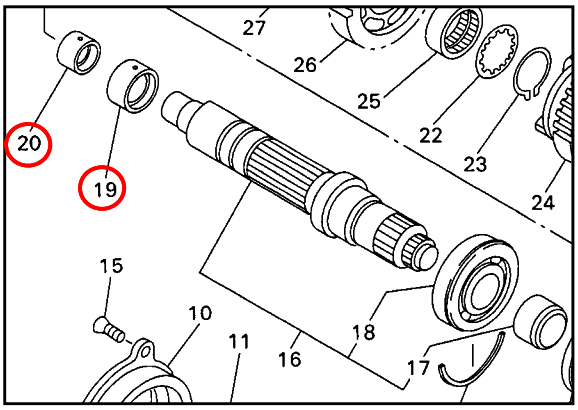

Parts Manager Check	Service Manager Check	Parts Manager File

YAMAHA MOTOR CO.,LTD
2500 Shingai Iwata Shizuoka 438-8501.Japan
CUSTOMER & MARKET INFORMATION DEPT.

YAMAHA GENUINE Parts & Accessories

PARTS NEWS

YAMAHA
YAMAHA MOTOR CO., LTD.
2500 SHINGAI IWATA SHIZUOKA JAPAN

News No M/C-04134

Date: October,19, 2004

Signature: K.Otsuka

Model	YZF-R1 (See the "List of Models and CATALOGUE No's below.")
Subject	PARTS CATALOGUE CORRECTIONS
CATALOGUE NO.	See the "List of Models and CATALOGUE No's below."

List of Models and CATALOGUE No's.
The applicable MODELS, MODEL CODES, and CATALOGUE No's. are as follows.

MODEL (MODEL CODE)	CATALOGUE No.	MODEL (MODEL CODE)	CATALOGUE No.
YZF-R1(5JJ1)	105JJ-300E2 205JJ-300E2	YZF-R1(5PW1)	1A5PW-300E4 2A5PW-300E4
YZF-R1(5JJ1,5JJ7)	105JJ-332G2 205JJ-332G2	YZF-R1(5PW1)	1A5PW-332G4 2A5PW-332G4
YZF-R1(5JJ2)	105JJ-351F2 205JJ-351F2	YZF-R1(5PW2)	1A5PW-351F4 2A5PW-351F4
YZF-R1(5JJ1)	105JJ-352S2 205JJ-352S2	YZF-R1(5PW1)	1A5PW-352S4 2A5PW-352S4
YZF-R1M/YZF-R1MC (5JJ3,5JJ4,5JJ6/5JJ5)	105JJ-100E2 205JJ-100E2	YZF-R1P/YZF-R1PC (5PW3,5PW4,5PW6/5PW5)	1A5PW-100E3 2A5PW-100E3
YZF-R1(5JJ8)	115JJ-300E1 215JJ-300E1	YZF-R1(5PW7)	1B5PW-300E1 2B5PW-300E1
YZF-R1(5JJ8,5JJA)	115JJ-332G1 215JJ-332G1	YZF-R1(5PW7)	1B5PW-332G1 2B5PW-332G1
YZF-R1(5JJ9)	115JJ-351F1 215JJ-351F1	YZF-R1(5PW8)	1B5PW-351F1 2B5PW-351F1
YZF-R1(5JJ8)	115JJ-352S1 215JJ-352S1	YZF-R1(5PW7)	1B5PW-352S1 2B5PW-352S1
YZF-R1N/YZF-R1NC (5JJB,5JJC,5JJE/5JJD)	115JJ-100E1 215JJ-100E1	YZF-R1R/YZF-R1RC (5PW9,5PWA,5PWC/5PWB)	1B5PW-100E2 2B5PW-100E2
YZF-R1SN/YZF-R1SNC (5JJF,5JJH/5JJG)	115JJ-100EA 215JJ-100EA	YZF-R1R/YZF-R1RC (5PWD,5PWF,5PWG/5PWE)	1B5PW-100EA 2B5PW-100EA
		YZF-R1R/YZF-R1RC (5PWA,5PWD/5PWB,5PWE)	1B5PW-110E1

*;These changes are applied from initial production.

Thank you very much for your cooperation.

Parts Manager Check	Service Manager Check	Parts Manager File

YAMAHA MOTOR CO.,LTD
2500 Shingai Iwata Shizuoka 438-8501.Japan
CUSTOMER & MARKET INFORMATION DEPT.

YAMAHA GENUINE Parts & Accessories

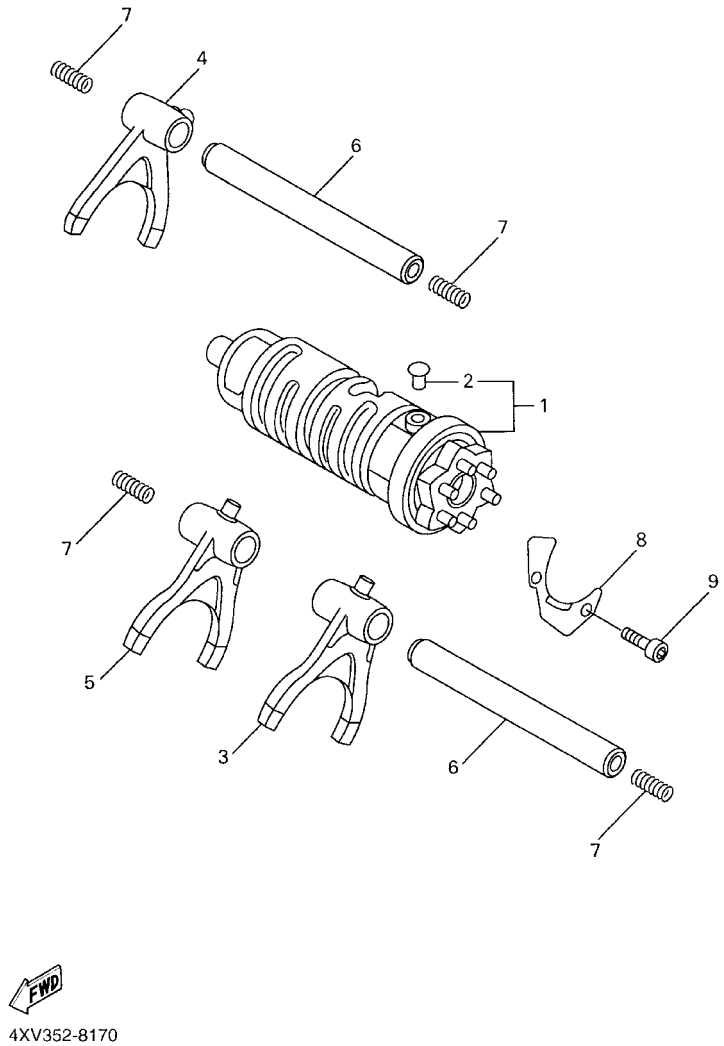

FIG. 18 SHIFT CAM. FORK

REF. NO.	PART NO.	DESCRIPTION	5JJ1					REMARKS
1	4XV–18540–00	SHIFT CAM ASSY	1					
2	136–18542–00	.POINT, NEUTRAL	1					
3	4XV–18511–00	FORK, SHIFT 1	1					
4	5JJ–18512–00	FORK, SHIFT 2	1					
5	4XV–18513–00	FORK, SHIFT 3	1					
6	4XV–18531–00	BAR, SHIFT FORK GUIDE 1	2					
7	90501–064L1	SPRING, COMPRESSION	4					
8	4XV–18536–00	STOPPER, SHIFT BAR	1					
9	90110–06226	BOLT, HEXAGON SOCKET HEAD	2					

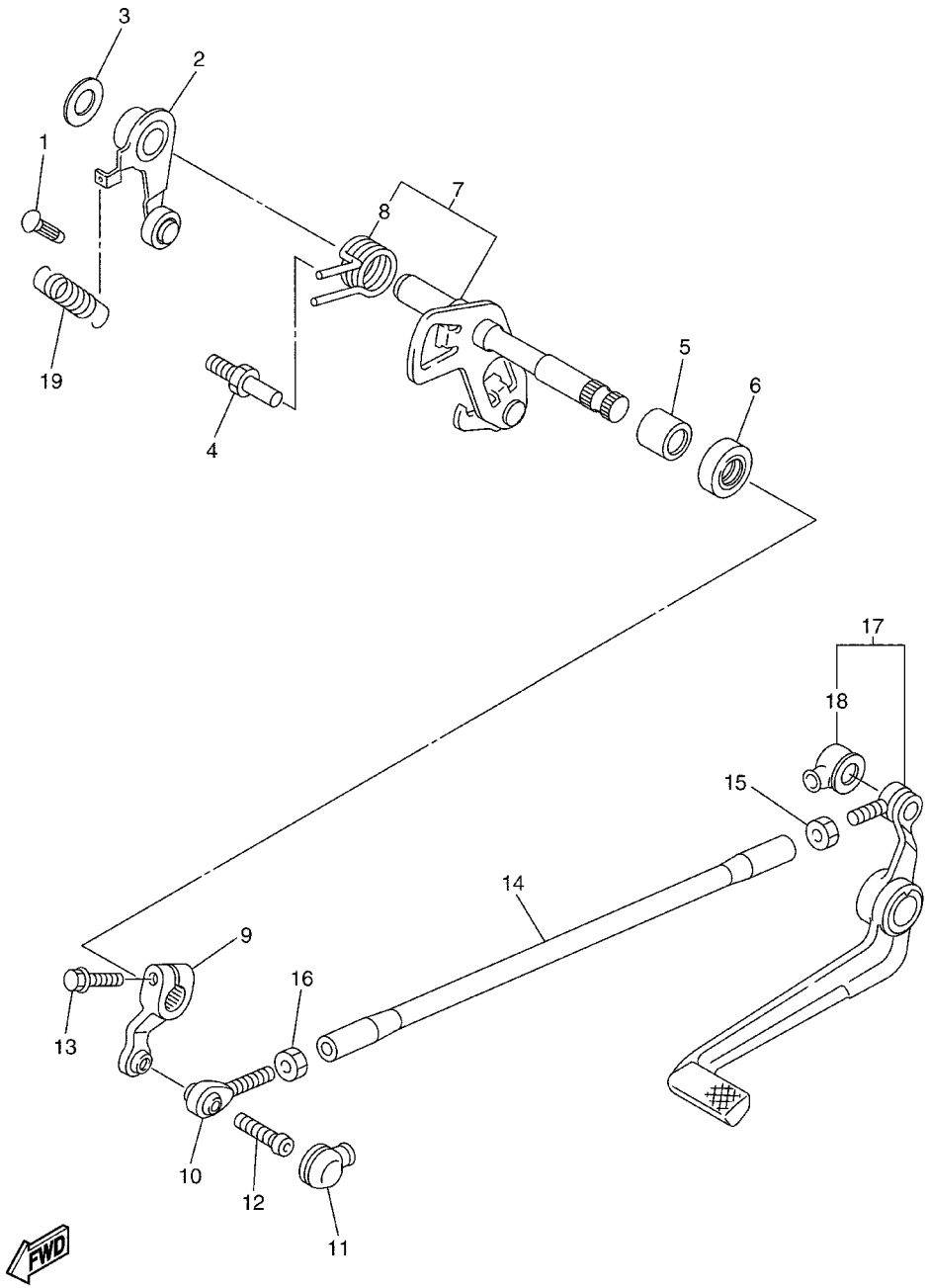

5JJ1300-0190

FIG. 19 SHIFT SHAFT

REF. NO.	PART NO.	DESCRIPTION	5JJ1					REMARKS
1	132–16346–00	HOOK, SPRING	1					
2	5JJ–18140–00	STOPPER LEVER ASSY	1					
3	90201–120K4	WASHER, PLATE	1					
4	4XV–18127–00	STOPPER, SCREW	1					
5	93315–11206	BEARING	1					
6	93101–12004	OIL SEAL	1					
7	5JJ–18101–00	SHIFT SHAFT ASSY	1					
8	90508–29012	.SPRING, TORSION	1					
9	5JJ–18112–00	ARM, SHIFT	1					
10	5JJ–18116–00	JOINT, ROD 1	1					
11	4XV–18154–00	COVER, DUST	1					
12	90111–06019	BOLT	1					
13	95824–06020	BOLT, FLANGE	1					
14	4XV–18115–00	ROD, SHIFT	1					
15	90170–06228	NUT(COUNTER CLOCKWISE)	1					
16	95304–06700	NUT	1					
17	5JJ–18110–00	SHIFT PEDAL ASSY	1					
18	4XV–18154–00	.COVER, DUST	1					
19	90506–14002	SPRING, TENSION	1					

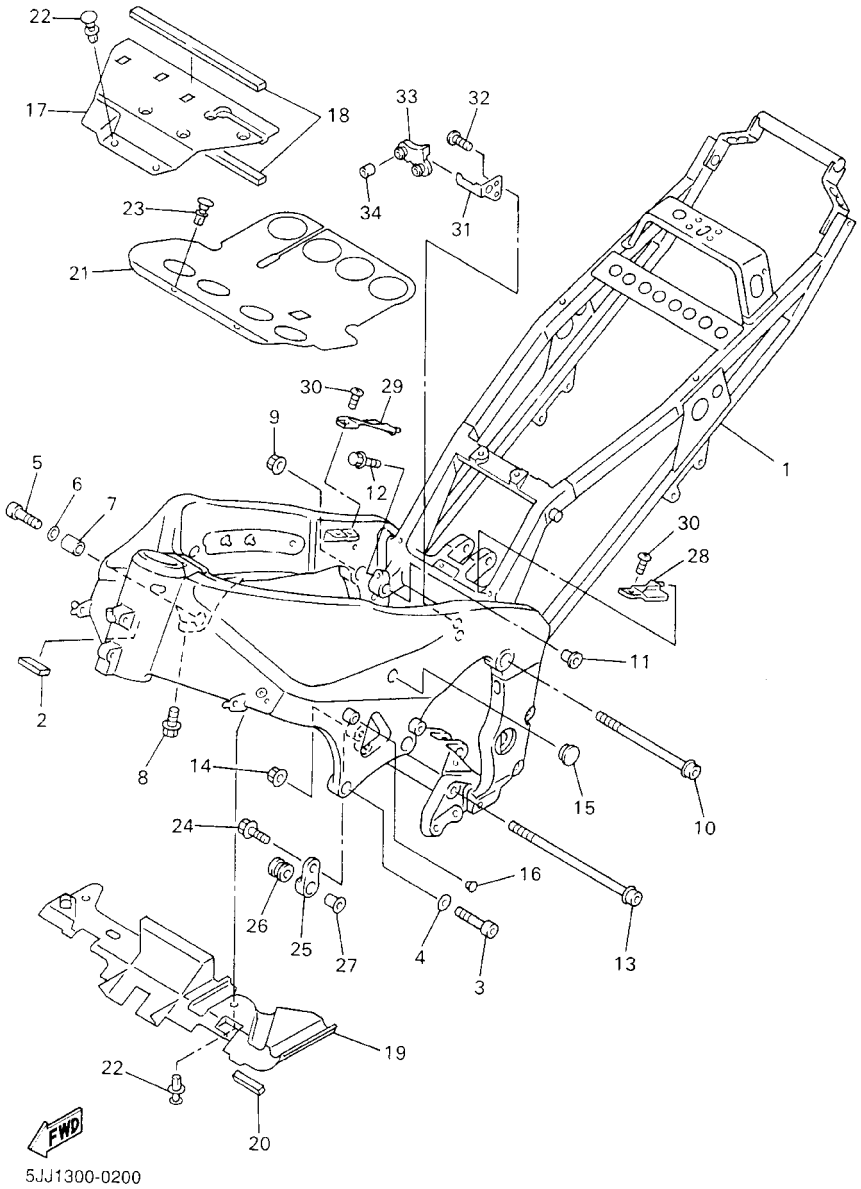

FIG. 20 FRAME

REF. NO.	PART NO.	DESCRIPTION	5JJ1					REMARKS
1	5JJ–21110–00	FRAME COMP.	1					
2	1KT–21746–00	DAMPER	1					
3	91314–10040	BOLT	2					
4	90201–10008	WASHER, PLATE	2					
5	91314–10050	BOLT	1					
6	90201–10008	WASHER, PLATE	1					
7	90387–12002	COLLAR	1					
8	95024–08035	BOLT, FLANGE	1					
9	90185–10002	NUT, SELF–LOCKING	1					
10	90109–104G5	BOLT	1					
11	90387–1112F	COLLAR	1					
12	95024–08035	BOLT, FLANGE	1					
13	90109–104G5	BOLT	1					
14	90185–10002	NUT, SELF–LOCKING	1					
15	90338–15202	PLUG	2					
16	90338–07124	PLUG	1					
17	4XV–2117M–00	COVER 2	1					
18	4XV–28371–00	DAMPER	2					
19	4XV–2137Y–01	GUIDE, AIR	1					
20	1KT–21746–00	DAMPER	1					
21	4XV–2117F–00	COVER	1					
22	90269–07077	RIVET	4					
23	90269–07084	RIVET	2					
24	95827–08025	BOLT, FLANGE	1					
25	4XV–21446–00	STAY, MUFFLER 2	1					
26	4XV–27424–00	DAMPER, FOOTREST 2	1					
27	90387–08005	COLLAR	1					

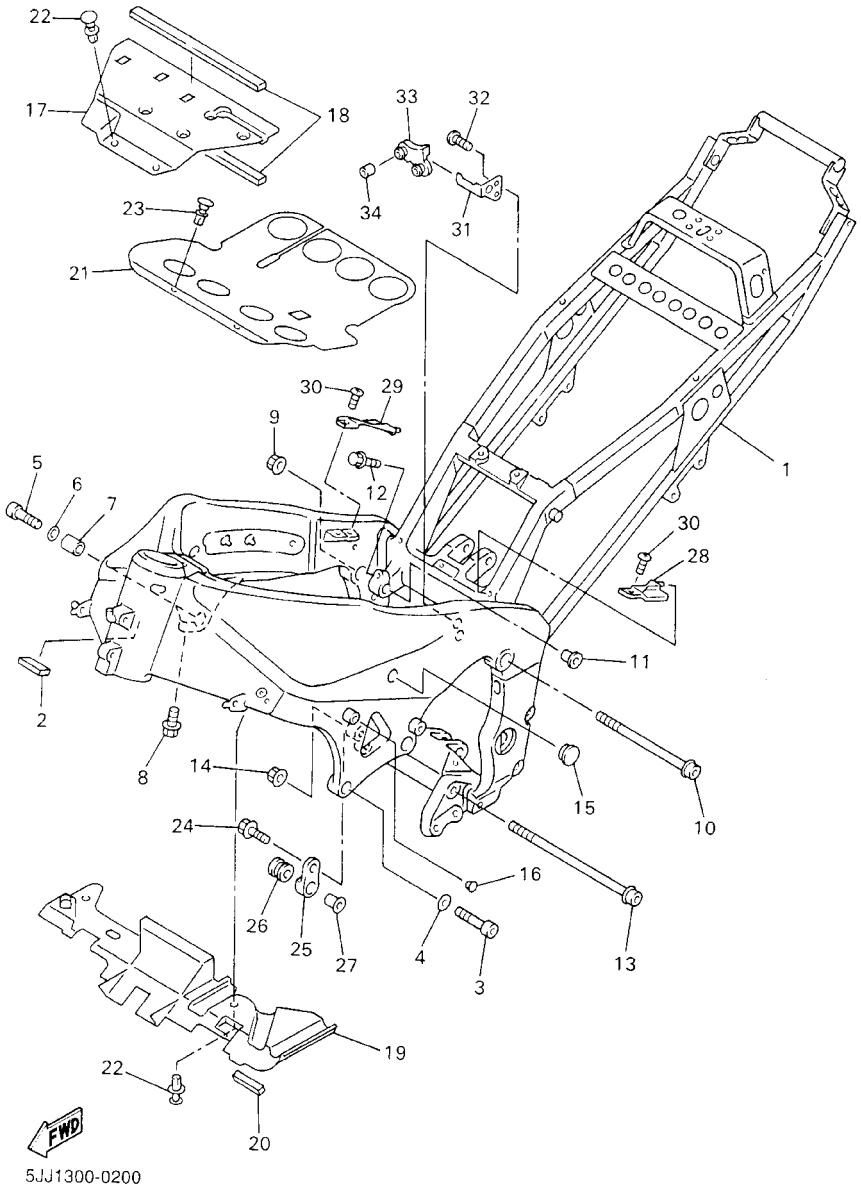

FIG. 20 FRAME

REF. NO.	PART NO.	DESCRIPTION	5JJ1					REMARKS
28	4XV–2117N–00	COVER 3	1					
29	4XV–2117R–00	COVER 4	1					
30	90154–05013	SCREW, BINDING	2					
31	4XV–2116J–00	BRACKET 7	1					
32	98907–06016	SCREW, BIND	2					
33	4XV–2116A–00	STAY 1	1					
34	90387–061K9	COLLAR	2					

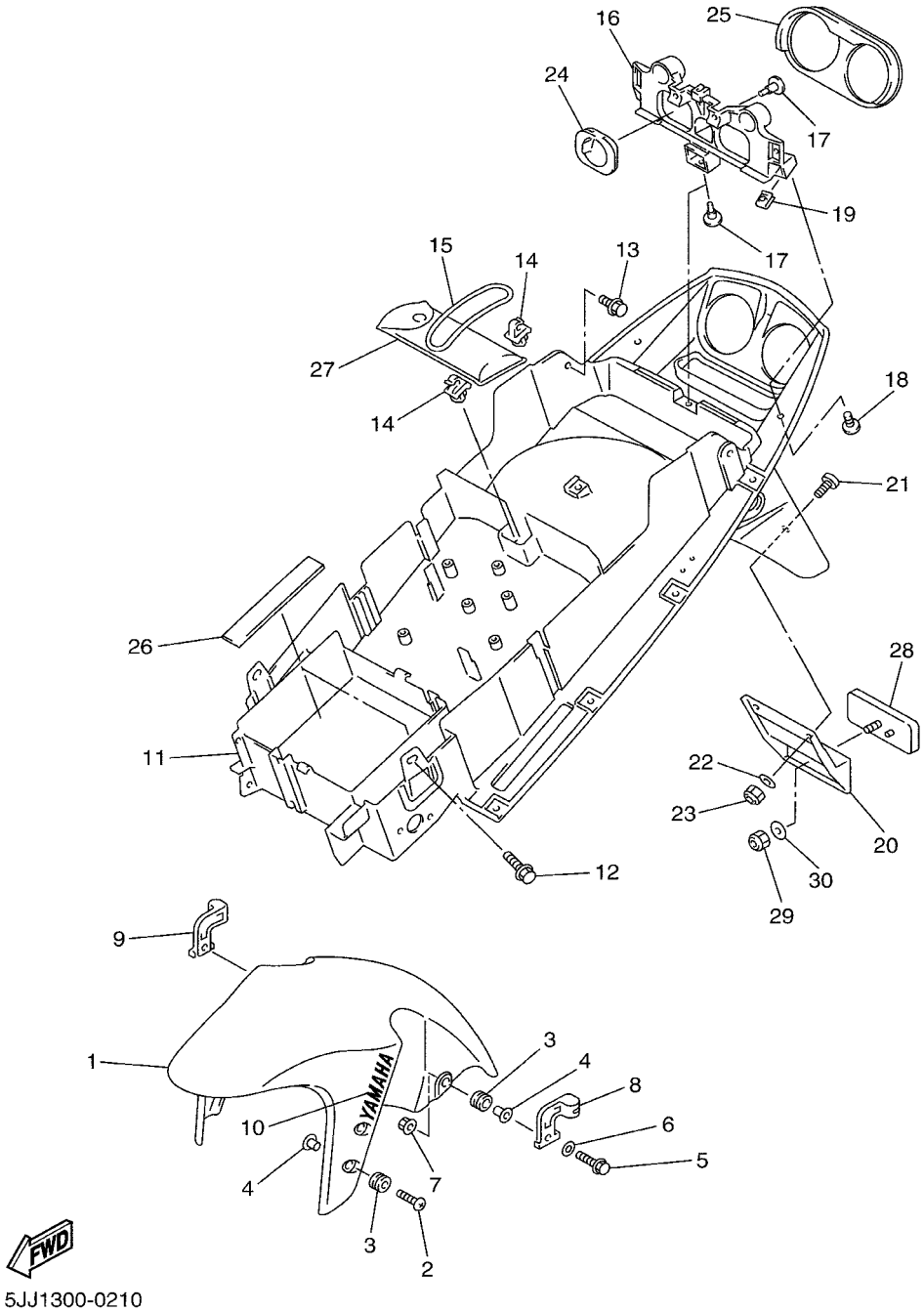

FIG. 21 FENDER

REF. NO.	PART NO.	DESCRIPTION	5JJ1					REMARKS
1	4XV–21511–01–P0	FENDER, FRONT	1					VRC1
	4XV–21511–01–P1	FENDER, FRONT	1					DPBMC
2	90154–06061	SCREW, BINDING	4					
3	90480–12072	GROMMET	6					
4	90387–065J6	COLLAR	6					
5	97007–06030	BOLT	2					
6	92907–06600	WASHER, PLATE	2					
7	95707–06500	NUT, FLANGE	2					
8	4XV–25875–00	HOLDER, BRAKE HOSE 1	1					
9	4XV–25876–00	HOLDER, BRAKE HOSE 2	1					
10	99241–00100	EMBLEM, YAMAHA	2					
11	5JJ–21611–00	FENDER, REAR	1					
12	90119–06010	BOLT, WITH WASHER	2					
13	90119–06009	BOLT, WITH WASHER	2					
14	90464–07259	CLAMP	2					
15	4XV–21376–00	BAND, TOOL	1					
16	5JJ–2117E–00	BRACKET, TAILLIGHT	1					
17	90269–07077	RIVET	3					
18	90154–05013	SCREW, BINDING	2					
19	90183–05061	NUT, SPRING	2					
20	4XV–85132–00	BRACKET, REFLECTOR 1	1					
21	90149–04278	SCREW	2					
22	90201–04018	WASHER, PLATE	2					
23	95607–04100	NUT, U	2					
24	5JJ–2172X–00	COVER, TAILLIGHT	2					
25	5JJ–21669–01	SEAL	1					
26	1AE–2834E–00	DAMPER	2					

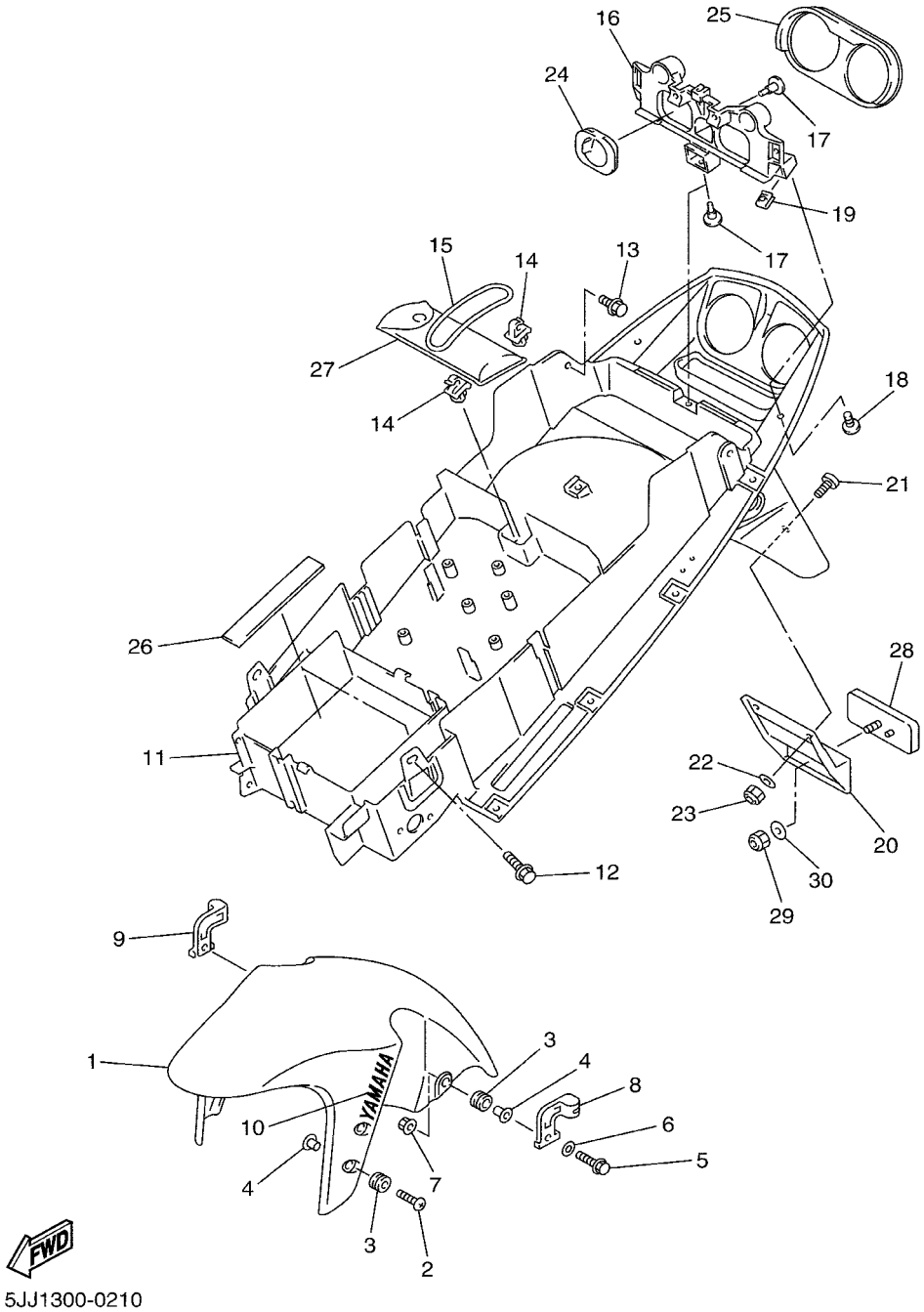

FIG. 21 FENDER

REF. NO.	PART NO.	DESCRIPTION	5JJ1					REMARKS
27	4XV–28100–00	TOOL KIT	1					
28	3Y6–85130–02	REAR REFLECTOR ASSY	1					
29	95607–05100	NUT, U	1					
30	90201–05725	WASHER, PLATE	1					

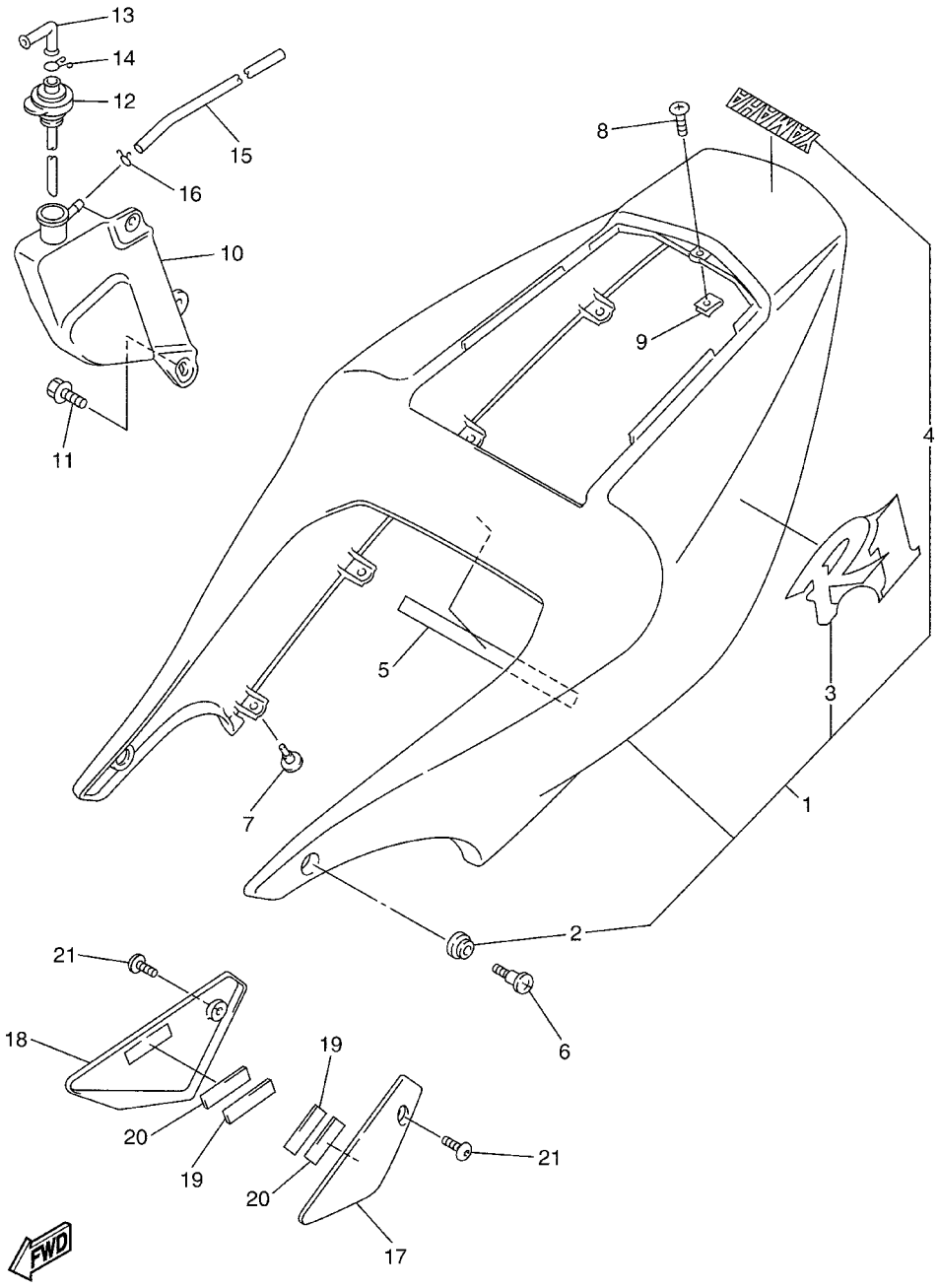

5JJ1300-0220

FIG. 22 SIDE COVER

REF. NO.	PART NO.	DESCRIPTION	5JJ1					REMARKS
1	5JJ–Y2171–10–P0	COVER, SIDE 1	1					UR VRC1
	5JJ–Y2171–00–P1	COVER, SIDE 1	1					UR DPBMC
2	90480–13398	.GROMMET	2					
3	4XV–21781–40	.EMBLEM 1	2					UR FOR VRC1
	4XV–21781–30	.EMBLEM 1	2					UR FOR DPBMC
4	99241–00080	.EMBLEM, YAMAHA	1					
5	5JJ–21746–00	DAMPER	1					
6	90150–06036	SCREW, ROUND HEAD	2					
7	90269–07077	RIVET	8					
8	90150–05039	SCREW, ROUND HEAD	1					
9	90183–05061	NUT, SPRING	1					
10	4XV–21871–00	TANK, RECOVERY	1					
11	90119–06117	BOLT, WITH WASHER	2					
12	4XV–21875–00	CAP	1					
13	26H–21828–00	ELBOW	1					
14	90467–11019	CLIP	1					
15	90445–086J6	HOSE	1					
16	90467–08003	CLIP	1					
17	5JJ–24129–00	COVER, SIDE 1	1					
18	5JJ–24139–00	COVER, SIDE 2	1					
19	4XV–2411G–00	HOOK, SIDE COVER	2					
20	4XV–2411H–00	HOOK, SIDE COVER 2	2					
21	90110–05201	BOLT, HEXAGON SOCKET HEAD	2					

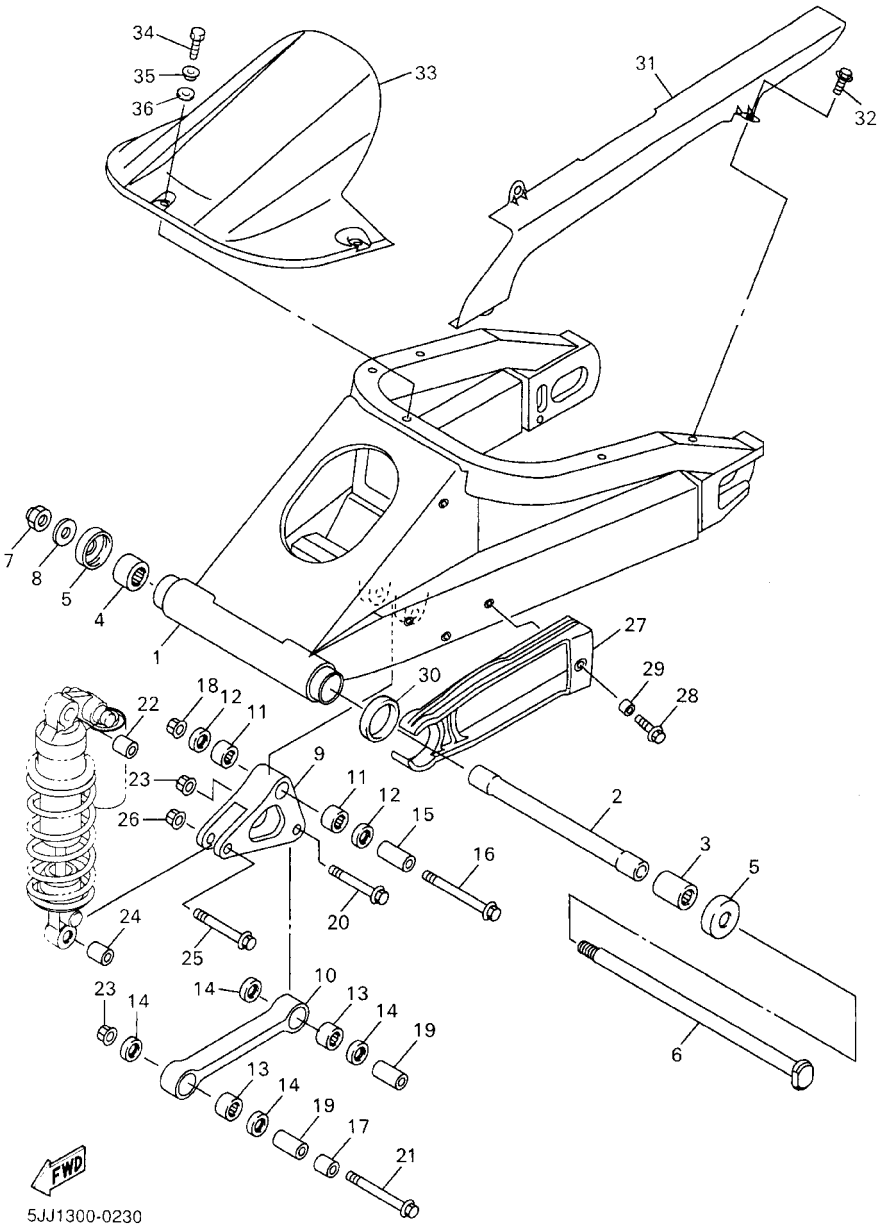

FIG. 23 REAR ARM

REF. NO.	PART NO.	DESCRIPTION	5JJ1					REMARKS
1	5JJ–22110–00	REAR ARM COMP.	1					
2	4XV–22184–00	BUSH	1					
3	93315–42523	BEARING	1					
4	93315–42536	BEARING	1					
5	5JJ–22128–00	COVER, THRUST 1	2					
6	4FN–22141–00	SHAFT, PIVOT	1					
7	90185–18167	NUT, SELF–LOCKING	1					
8	90201–18264	WASHER, PLATE	1					
9	4XV–2217A–00	ARM, RELAY	1					
10	4XV–2217M–00	ARM 1	1					
11	93315–31758	BEARING	2					
12	93109–17071	OIL SEAL	2					
13	93315–31758	BEARING	2					
14	93109–17071	OIL SEAL	4					
15	90387–1012B	COLLAR	1					
16	90105–10021	BOLT, WASHER BASED	1					
17	90387–1013U	COLLAR	1					
18	95607–10200	NUT, SELF–LOCKING	1					
19	90387–1012A	COLLAR	2					
20	90105–10017	BOLT, WASHER BASED	1					
21	90105–10018	BOLT, WASHER BASED	1					
22	90387–1013U	COLLAR	1					
23	95607–10200	NUT, SELF–LOCKING	2					
24	90387–1012A	COLLAR	1					
25	90105–10017	BOLT, WASHER BASED	1					
26	95607–10200	NUT, SELF–LOCKING	1					
27	5JJ–22151–00	SEAL, GUARD	1					

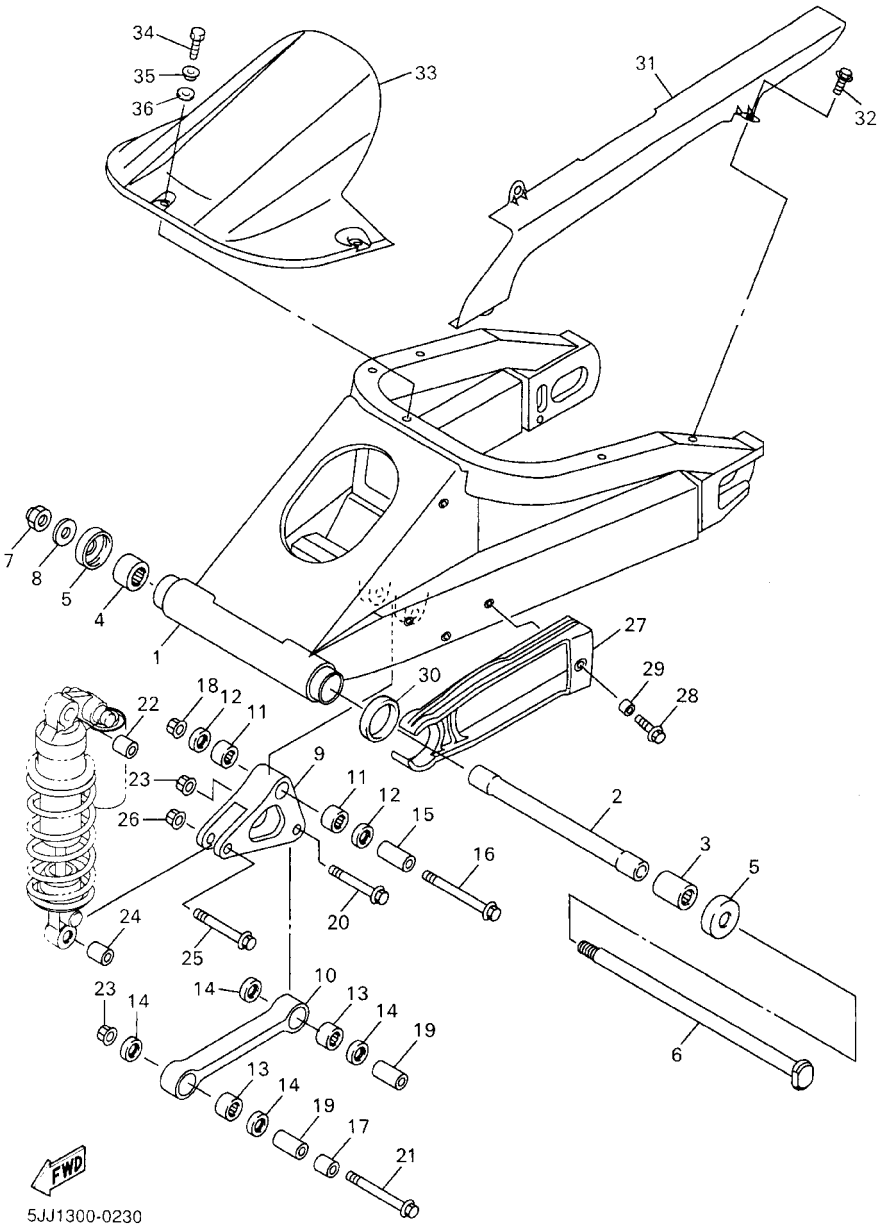

FIG. 23 REAR ARM

REF. NO.	PART NO.	DESCRIPTION	5JJ1					REMARKS
28	90119–06096	BOLT, WITH WASHER	1					
29	90387–06372	COLLAR	1					
30	5JJ–2214F–00	DAMPER 1	1					
31	4XV–22311–01	CASE, CHAIN	1					
32	90119–06052	BOLT, WITH WASHER	3					
33	4XV–21650–01–33	REAR FENDER COMP.	1					UR YB FOR VRC1
	4XV–21650–01–P1	REAR FENDER COMP.	1					UR DPBMC
34	97007–06016	BOLT	3					
35	90387–0615J	COLLAR	3					
36	4XV–28372–00	DAMPER	3					

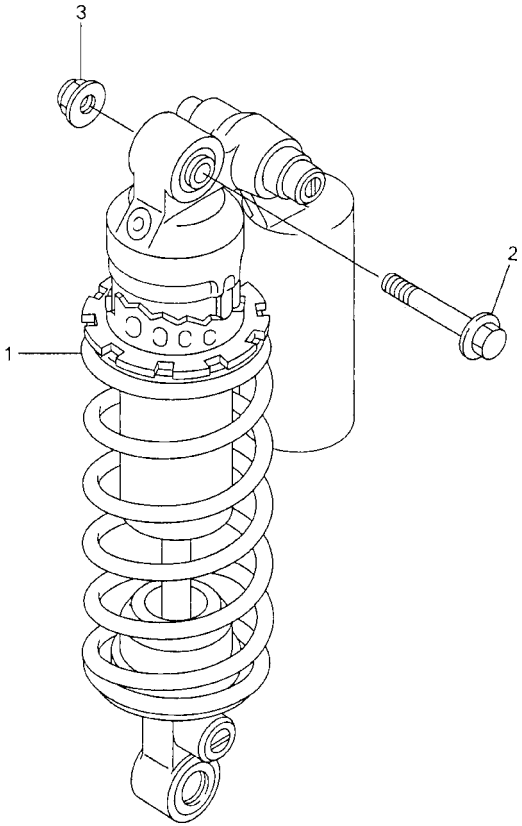

5JJ1300-0240

FIG. 24 REAR SUSPENSION

REF. NO.	PART NO.	DESCRIPTION	5JJ1					REMARKS
1	5JJ–22210–00	SHOCK ABSORBER ASSY, REAR	1					
2	90105–10020	BOLT, WASHER BASED	1					
3	95607–10200	NUT, SELF–LOCKING	1					

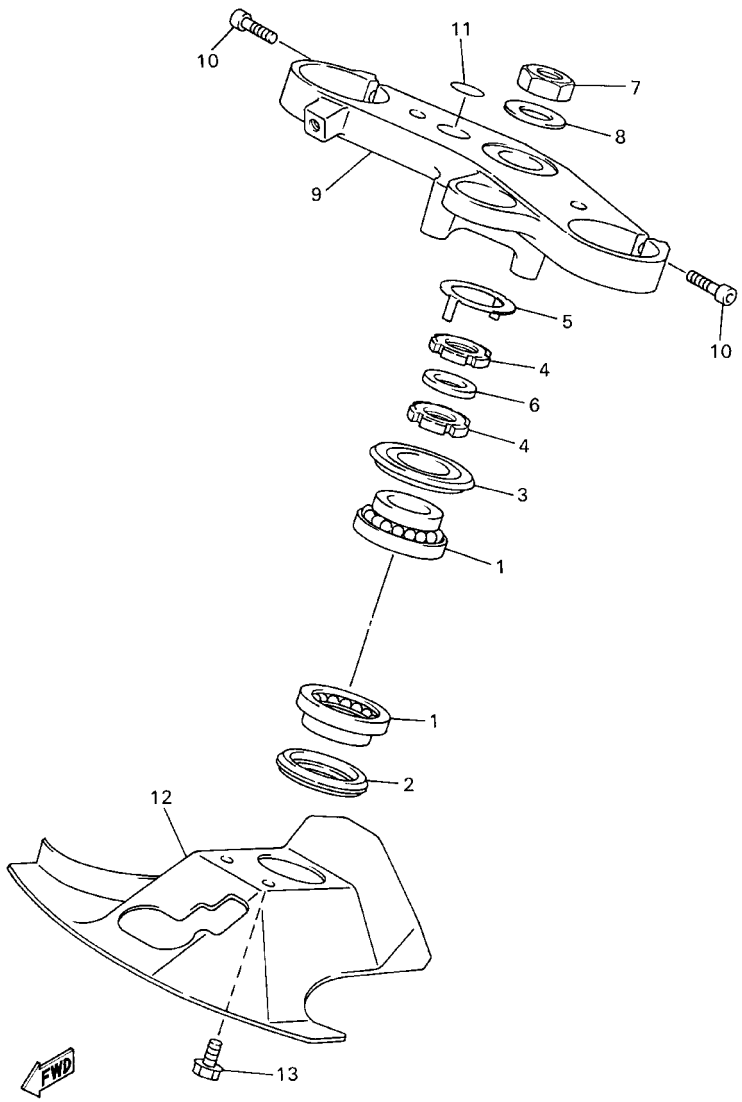

4XV352-8240

FIG. 25 STEERING

REF. NO.	PART NO.	DESCRIPTION	5JJ1					REMARKS
1	93399–99932	BEARING	2					
2	3FV–23462–00	SEAL, STEERING	1					
3	4XV–23415–00	COVER, BALL RACE 1	1					
4	90179–30691	NUT	2					
5	4XV–23418–00	WASHER, SPECIAL	1					
6	90202–30235	WASHER, PLATE	1					
7	90170–28419	NUT	1					
8	90201–281U8	WASHER, PLATE	1					
9	4XV–23435–00	CROWN, HANDLE	1					
10	91314–08030	BOLT	2					
11	4XV–2341B–00	EMBLEM	1					
12	4XV–23818–00	COVER, STEERING	1					
13	90119–06114	BOLT, WITH WASHER	2					

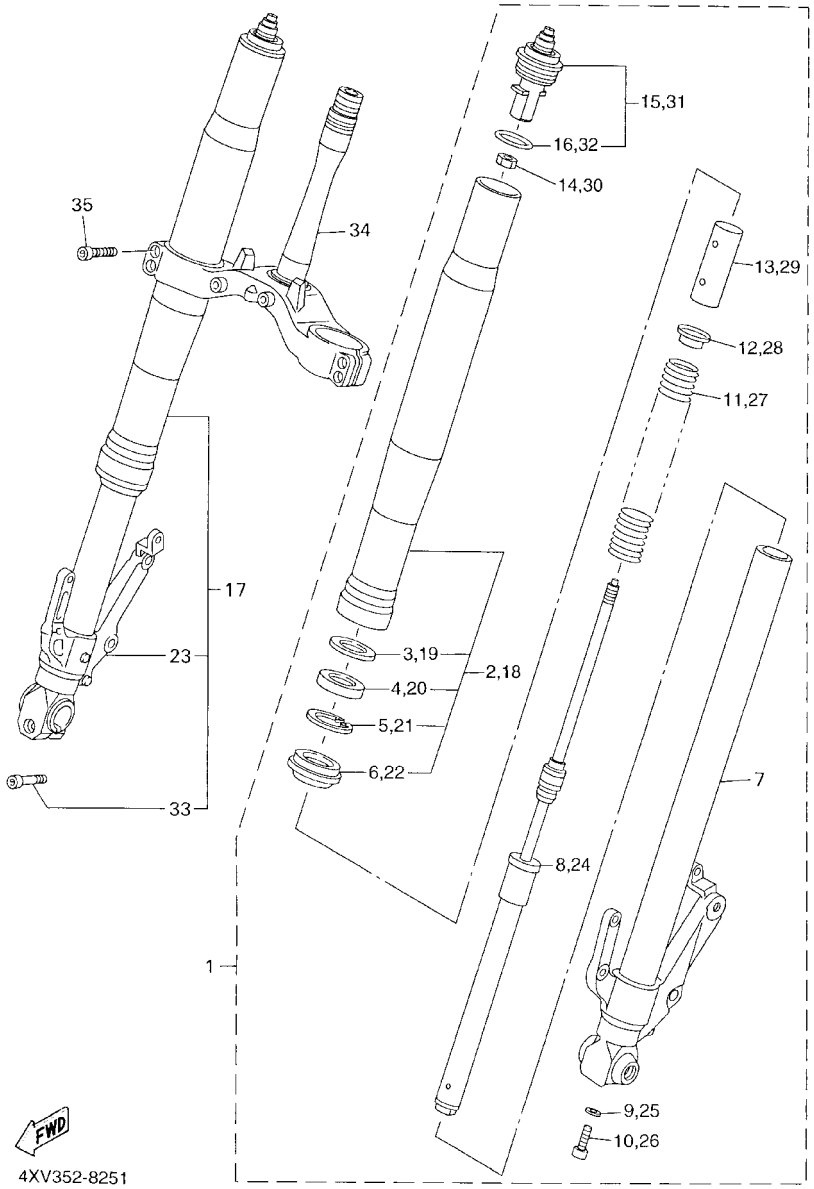

FIG. 26 FRONT FORK

REF. NO.	PART NO.	DESCRIPTION	5JJ1					REMARKS
1	5JJ–23102–00	FRONT FORK ASSY (L.H)	1					
2	5JJ–23136–00	.TUBE, OUTER (RIGHT)	1					
3	5JJ–23146–00	..WASHER, OIL SEAL	1					
4	4XV–23145–00	..OIL SEAL	1					
5	26H–23156–00	..CLIP, OIL SEAL	1					
6	4EB–23144–00	..SEAL, DUST	1					
7	4XV–23110–00	.INNER TUBE COMP.1	1					
8	5JJ–23170–00	.CYLINDER COMP., FRONT FORK	1					
9	2K8–23158–L0	.GASKET	1					
10	3LC–23181–00	.BOLT, HEXAGON SOCKET HEAD	1					
11	5JJ–23141–00	.SPRING, FRONT FORK	1					
12	4XV–23142–00	.SEAT, SPRING UPPER	1					
13	4XV–23118–00	.SPACER	1					
14	3LC–23357–00	.NUT	1					
15	4XV–23111–00	.BOLT, CAP	1					
16	3XJ–23147–L0	..O–RING	1					
17	5JJ–23103–00	FRONT FORK ASSY (R.H)	1					
18	5JJ–23136–00	.TUBE, OUTER (RIGHT)	1					
19	5JJ–23146–00	..WASHER, OIL SEAL	1					
20	4XV–23145–00	..OIL SEAL	1					
21	26H–23156–00	..CLIP, OIL SEAL	1					
22	4EB–23144–00	..SEAL, DUST	1					
23	4XV–23120–00	.INNER TUBE COMP.2	1					
24	5JJ–23170–00	.CYLINDER COMP., FRONT FORK	1					
25	2K8–23158–L0	.GASKET	1					
26	3LC–23181–00	.BOLT, HEXAGON SOCKET HEAD	1					
27	5JJ–23141–00	.SPRING, FRONT FORK	1					

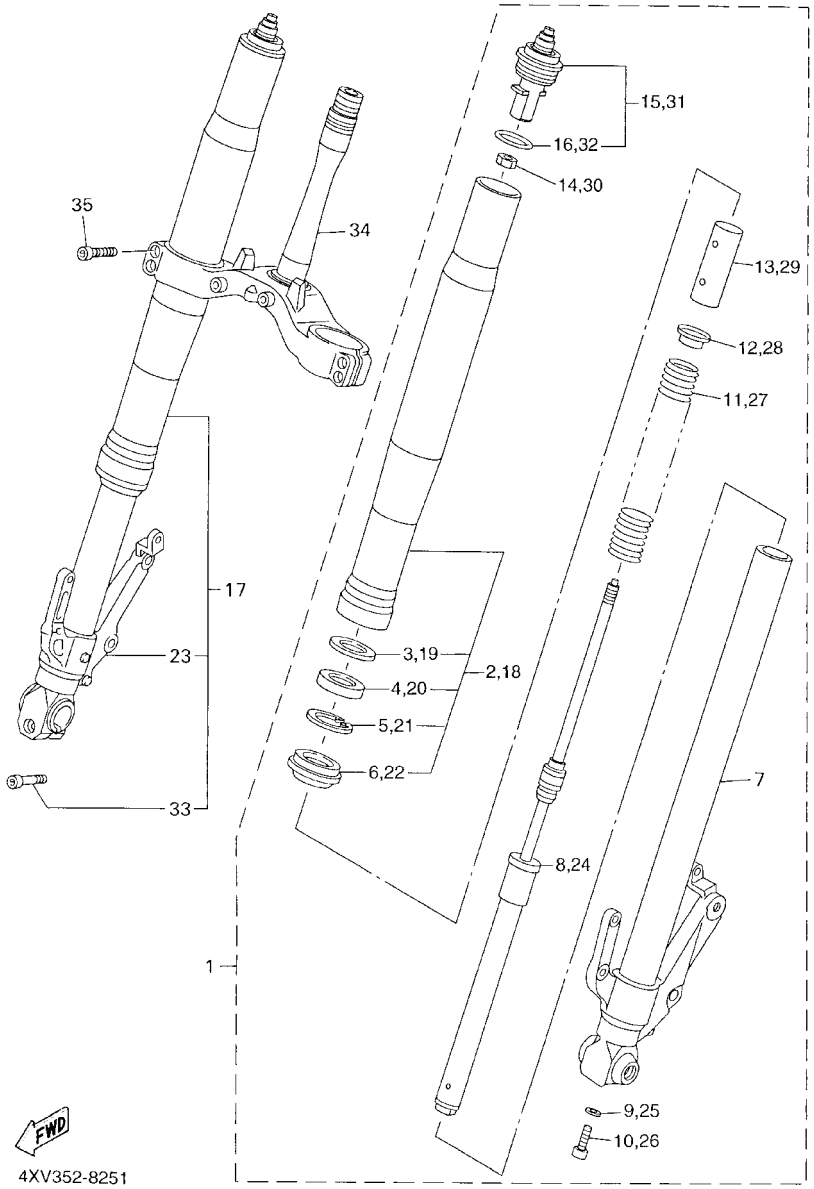

FIG. 26 FRONT FORK

REF. NO.	PART NO.	DESCRIPTION	5JJ1					REMARKS
28	4XV–23142–00	.SEAT, SPRING UPPER	1					
29	4XV–23118–00	.SPACER	1					
30	3LC–23357–00	.NUT	1					
31	4XV–23111–00	.BOLT, CAP	1					
32	3XJ–23147–L0	..O–RING	1					
33	91314–08040	.BOLT	1					
34	5JJ–23340–00	UNDER BRACKET COMP.	1					
35	91314–08030	BOLT	4					

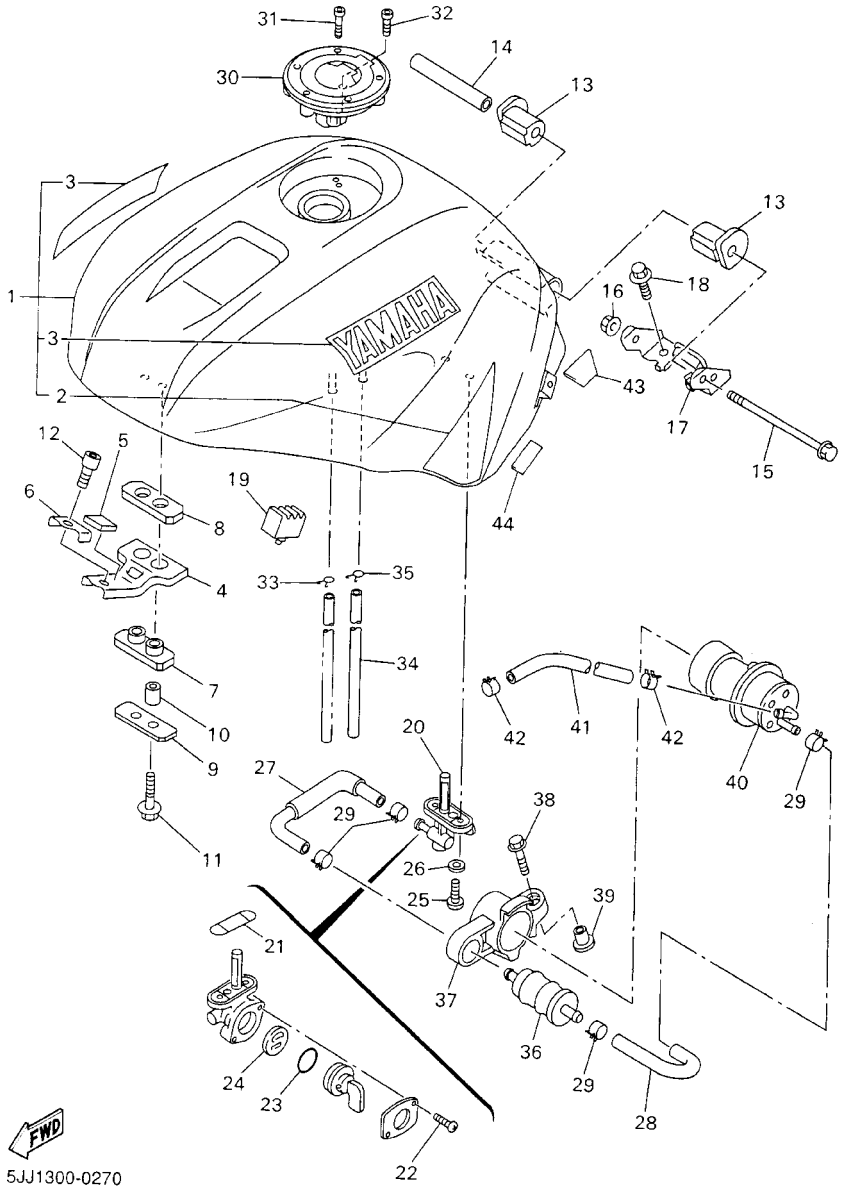

FIG. 27 FUEL TANK

REF. NO.	PART NO.	DESCRIPTION	5JJ1					REMARKS
1	5JJ–Y2410–30–01	FUEL TANK COMP.	1					UR VRC1
	5JJ–Y2410–30–02	FUEL TANK COMP.	1					UR DPBMC
2	5JJ–24240–00	.GRAPHIC SET	1					FOR VRC1
3	99221–00180	.EMBLEM, YAMAHA	2					
4	5JJ–24191–00	BRACKET, FUEL TANK 1	1					
5	1AE–2837J–00	DAMPER 5	1					
6	5JJ–24186–00	WASHER, SPECIAL	1					
7	2GH–24181–00	DAMPER, LOCATING 1	1					
8	2GH–24183–00	DAMPER, LOCATING 3	1					
9	5JJ–24187–00	WASHER, SPECIAL	1					
10	90387–06006	COLLAR	2					
11	90119–06190	BOLT, WITH WASHER	2					
12	91314–06016	BOLT	1					
13	4YR–24181–00	DAMPER, LOCATING 1	2					
14	90387–06007	COLLAR	1					
15	95817–06110	BOLT, FLANGE	1					
16	95607–06200	NUT, SELF U–FLANGE	1					
17	5JJ–21348–00	BRACKT, TANK FITTING	1					
18	90119–06044	BOLT, WITH WASHER	2					
19	4XV–24183–00	DAMPER, LOCATING 3	2					
20	4KM–24500–10	FUEL COCK ASSY 1	1					
21	4X8–24512–00	.O–RING	1					
22	98507–03008	.SCREW, PAN HEAD	2					
23	3AJ–24534–00	.SEAL, COCK	1					
24	3AJ–24523–00	.VALVE PACKING	1					
25	90149–06011	SCREW	2					
26	90202–05193	WASHER, PLATE	2					

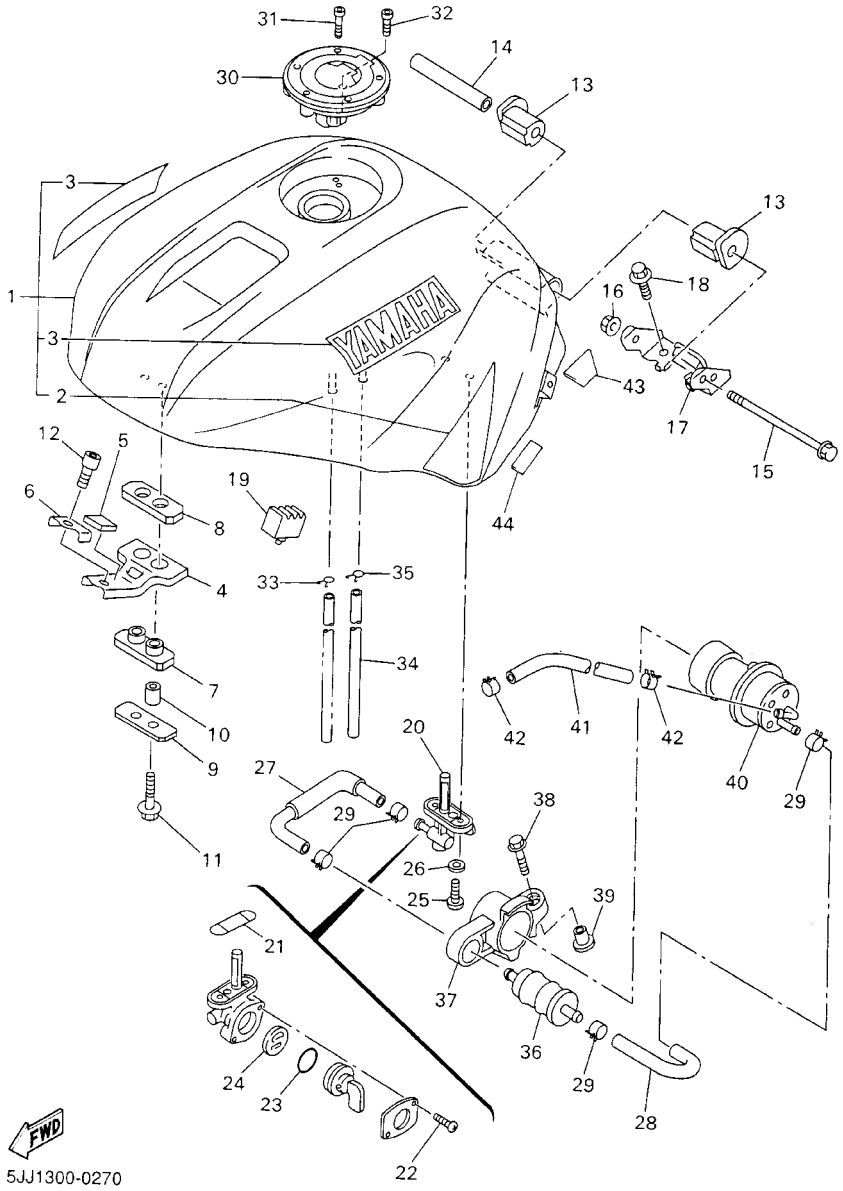

FIG. 27 FUEL TANK

REF. NO.	PART NO.	DESCRIPTION	5JJ1					REMARKS
27	4XV–24311–00	PIPE, FUEL 1	1					
28	4XV–24312–00	PIPE 2	1					
29	90467–12124	CLIP	4					
30	5JJ–24602–00	CAP ASSY	1					
31	90110–05112	BOLT, HEXAGON SOCKET HEAD	3					
32	91317–05010	BOLT	1					
33	90467–09006	CLIP	1					
34	90445–10015	HOSE	1					
35	90467–09006	CLIP	1					
36	1FK–24560–00	FILTER ASSY	1					
37	4XV–24398–01	BAND 1	1					
38	90119–06096	BOLT, WITH WASHER	1					
39	90387–062L2	COLLAR	1					
40	4SV–13907–01	FUEL PUMP COMP.	1					
41	90445–142K2	HOSE	1					
42	90467–13123	CLIP	2					
43	3SP–21732–00	SEAL 1	2					
44	5H0–8235Y–M0	DAMPER	2					

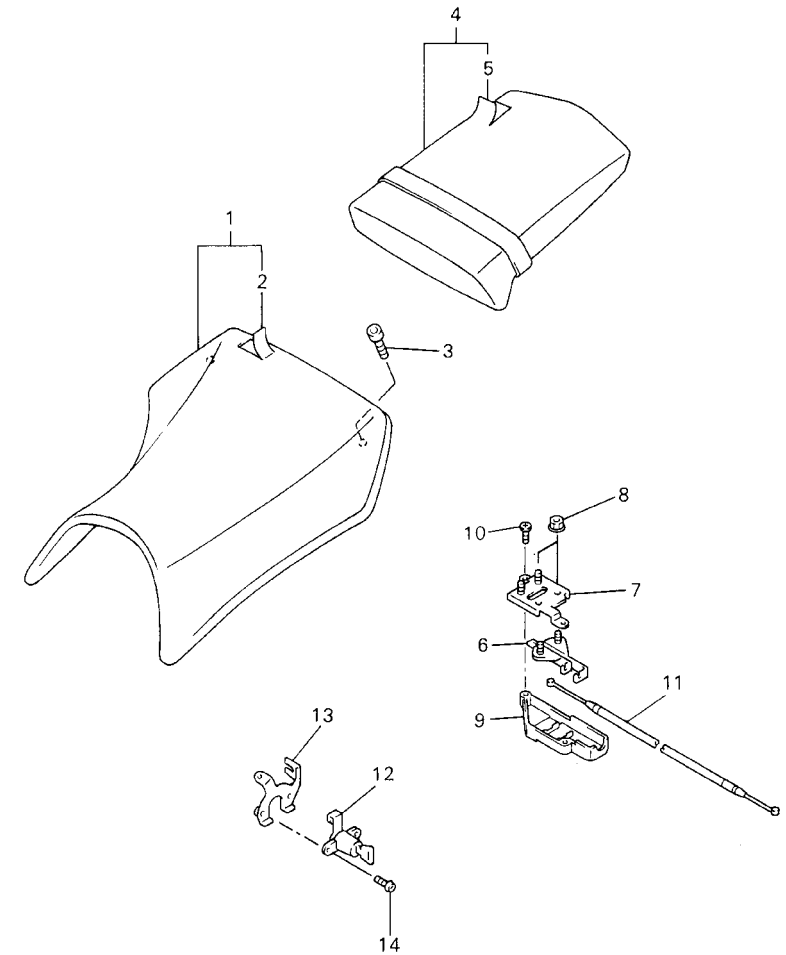

FIG. 28 SEAT

REF. NO.	PART NO.	DESCRIPTION	5JJ1					REMARKS
1	5JJ–24710–00	SINGLE SEAT ASSY	1					
2	5JJ–2470F–00	.COVER, SEAT	1					
3	90110–06258	BOLT, HEXAGON SOCKET HEAD	2					
4	5JJ–24750–00	TANDEM SEAT ASSY	1					
5	5JJ–24751–00	.COVER, TANDEM SEAT	1					
6	4BP–24780–00	SEAT LOCK ASSY	1					
7	5JJ–24792–00	PLATE	1					
8	95707–06500	NUT, FLANGE	4					
9	5JJ–2475X–00	COVER,2	1					
10	97707–40012	SCREW, TAPPING	2					
11	5JJ–2478E–00	CABLE, SEAT LOCK	1					
12	2TV–W2470–00	SEAT LOCK ASSY	1					
13	4XV–2117K–00	STAY, LOCK	1					
14	90149–06308	SCREW	2					

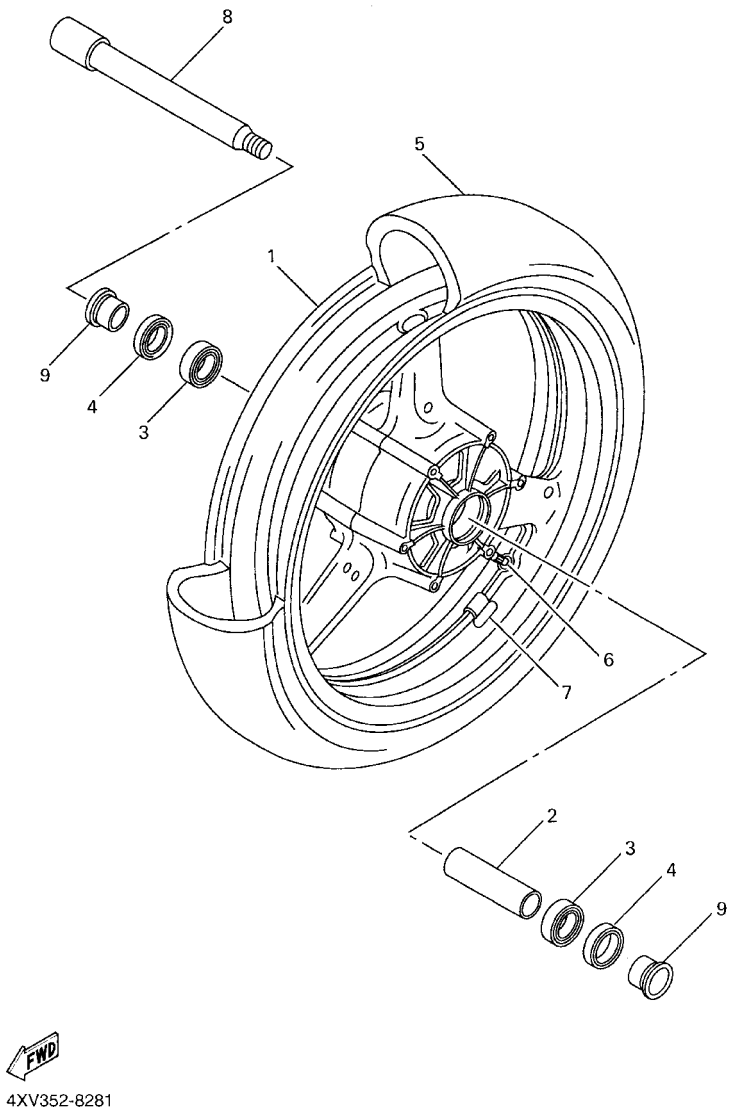

FIG. 29 FRONT WHEEL

REF. NO.	PART NO.	DESCRIPTION	5JJ1					REMARKS
1	4XV–25168–00–33	CAST WHEEL, FRONT	1					YB
2	4XV–25117–00	SPACER, BEARING	1					
3	93306–00420	BEARING (B6004)	2					
4	93106–28043	OIL SEAL	2					
5	*	TIRE (120/70 ZR17 MEZ3YF)	1					LM METZELER FOR BEL,ITA,NLD
	94112–17012	TIRE (120/70 ZR17 D207F)	1					DUNLOP
6	93900–00030	VALVE, RIM	1					
7	29L–25398–00	BALANCER, WHEEL (10G)	1					UN
	29L–25398–10	BALANCER, WHEEL (20G)	1					UN
	29L–25398–20	BALANCER, WHEEL (30G)	1					UN
8	4XV–25181–00	AXLE, WHEEL	1					
9	90387–22016	COLLAR, WHEEL	2					

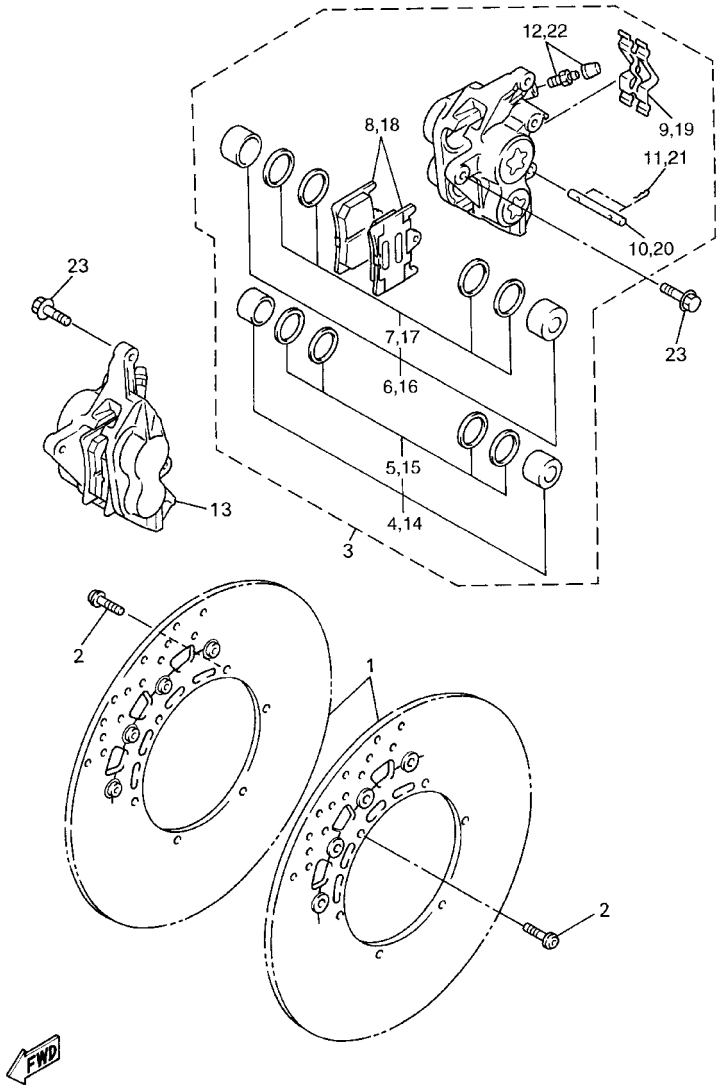

4XV352-8290

FIG. 30 FRONT BRAKE CALIPER

REF. NO.	PART NO.	DESCRIPTION	5JJ1					REMARKS
1	5JJ–2581T–00	DISC BRAKE ASSY	2					
2	90109–064G6	BOLT	12					
3	5JJ–2580T–00	CALIPER ASSY (LEFT)	1					
4	4SV–W0057–00	.PISTON ASSY, CALIPER	1					
5	3MA–W0047–10	..CALIPER SEAL KIT	1					
6	4SV–W0057–10	.PISTON ASSY, CALIPER	1					
7	3GM–W0047–10	..CALIPER SEAL KIT	1					
8	5JJ–W0045–00	.BRAKE PAD KIT	1					
9	4SV–25919–00	.SUPPORT, PAD	1					
10	4SV–25924–00	.PIN, PAD	1					
11	3GM–25925–00	.CLIP	2					
12	1J3–W0048–00	.BLEED SCREW KIT	1					
13	5JJ–2580U–00	CALIPER ASSY (RIGHT)	1					
14	4SV–W0057–00	.PISTON ASSY, CALIPER	1					
15	3MA–W0047–10	..CALIPER SEAL KIT	1					
16	4SV–W0057–10	.PISTON ASSY, CALIPER	1					
17	3GM–W0047–10	..CALIPER SEAL KIT	1					
18	5JJ–W0045–00	.BRAKE PAD KIT	1					
19	4SV–25919–00	.SUPPORT, PAD	1					
20	4SV–25924–00	.PIN, PAD	1					
21	3GM–25925–00	.CLIP	2					
22	1J3–W0048–00	.BLEED SCREW KIT	1					
23	90105–105A7	BOLT, WASHER BASED	4					

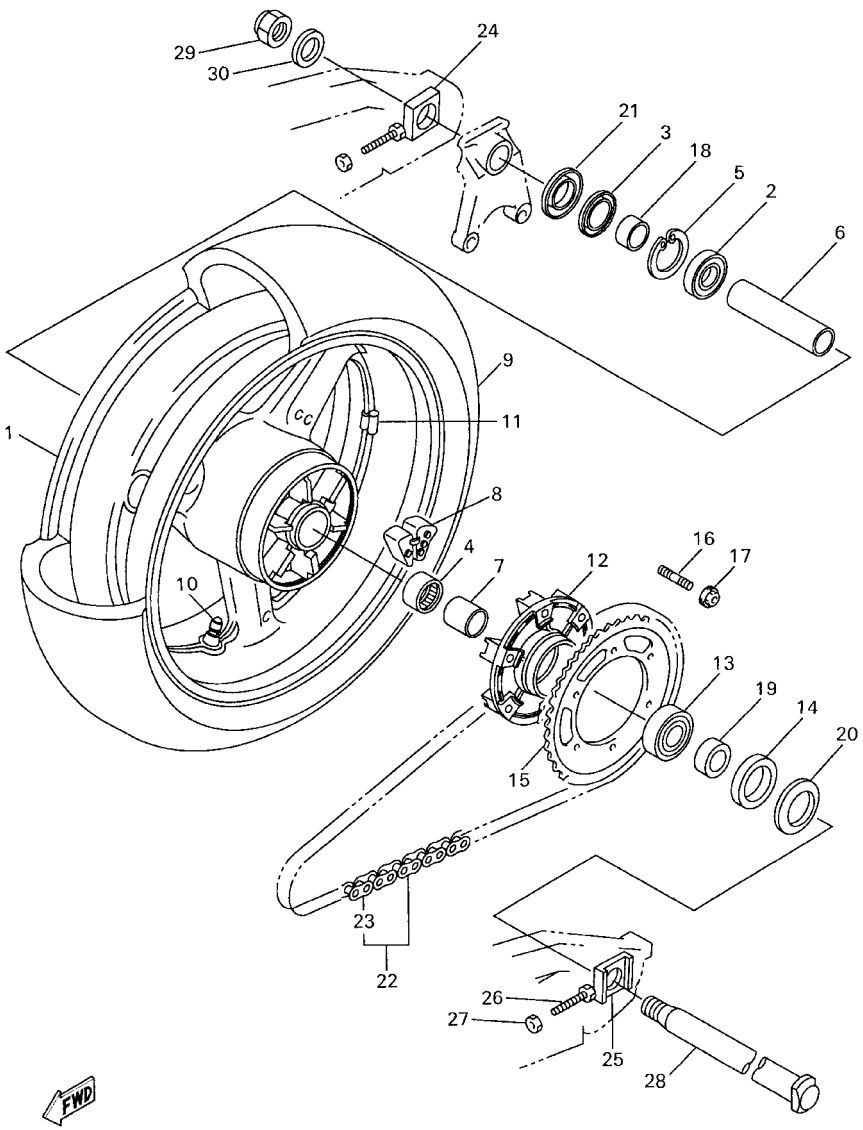

4XV352-8300

FIG. 31 REAR WHEEL

REF. NO.	PART NO.	DESCRIPTION	5JJ1					REMARKS
1	4XV–25338–00–33	CAST WHEEL, REAR	1					YB
2	93306–07806	BEARING	1					
3	93106–35042	OIL SEAL	1					
4	93317–43580	BEARING	1					
5	99009–52500	CIRCLIP	1					
6	4XV–25317–00	SPACER, BEARING	1					
7	4XV–25383–00	COLLAR, WHEEL	1					
8	4XV–25364–00	DAMPER	6					
9	*	TIRE (190/50 ZR17 MEZ3Y)	1					LM METZELER FOR BEL,ITA,NLD
	94119–17009	TIRE (190/50 ZR17 D207)	1					DUNLOP
10	93900–00030	VALVE, RIM	1					
11	29L–25398–00	BALANCER, WHEEL (10G)	1					UN
	29L–25398–10	BALANCER, WHEEL (20G)	1					UN
	29L–25398–20	BALANCER, WHEEL (30G)	1					UN
12	5JJ–25366–00	CLUTCH, HUB	1					
13	93306–20531	BEARING	1					
14	93106–40013	OIL SEAL	1					
15	4XV–25443–20	SPROCKET, DRIVEN (43T)	1					
16	90116–10485	BOLT, STUD	6					
17	95604–10200	NUT, SELF–LOCKING	6					
18	4XV–25377–00	COLLAR, WHEEL	1					
19	4XV–25376–00	COLLAR, WHEEL	1					
20	5JJ–25367–00	COVER, HUB DUST	1					
21	4XV–25327–00	COVER, PLATE	1					
22	94581–69114	CHAIN (DID50ZVM–114LL)	1					
23	94681–69031	.JOINT, CHAIN	1					
24	4XV–25388–00	PULLER, CHAIN 1	1					

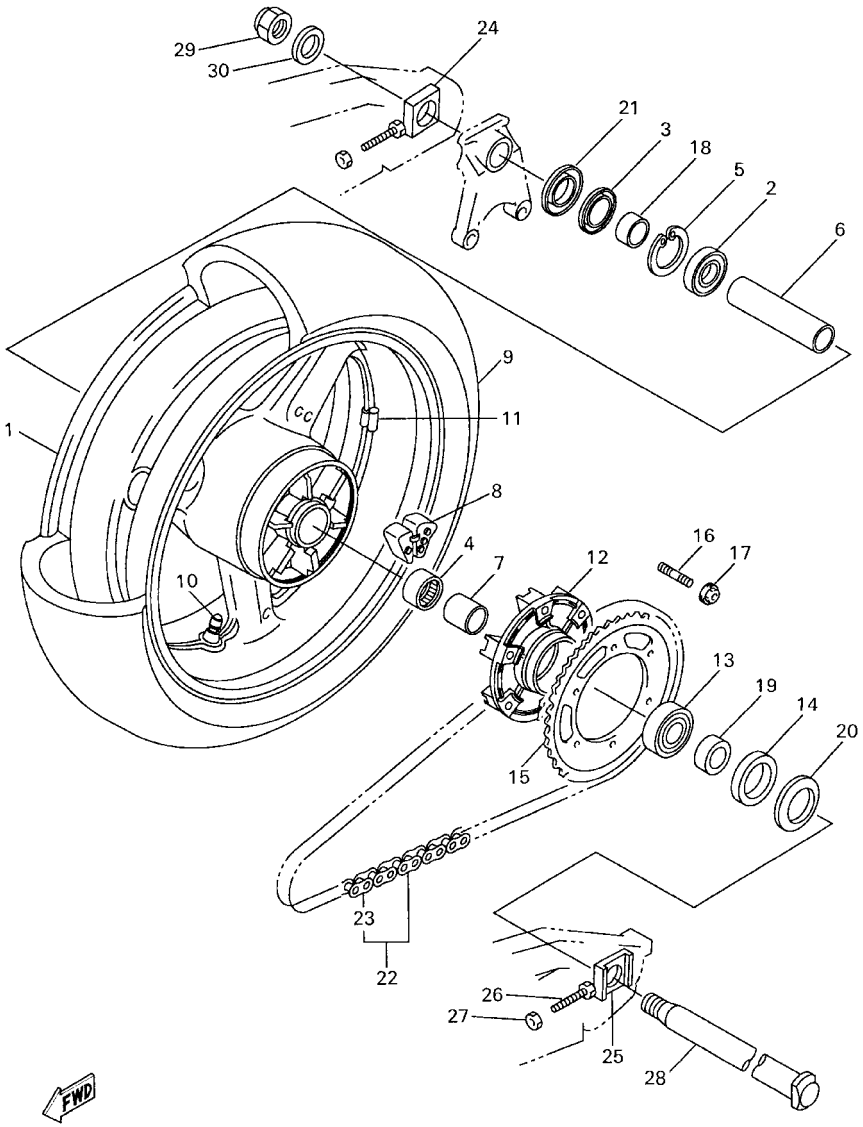

FIG. 31 REAR WHEEL

REF. NO.	PART NO.	DESCRIPTION	5JJ1					REMARKS
25	4XV–25389–00	PULLER, CHAIN 2	1					
26	90101–08766	BOLT	2					
27	95307–08600	NUT	2					
28	4XV–25381–00	AXLE, WHEEL	1					
29	90185–24165	NUT, SELF–LOCKING	1					
30	90201–257R5	WASHER, PLATE	1					

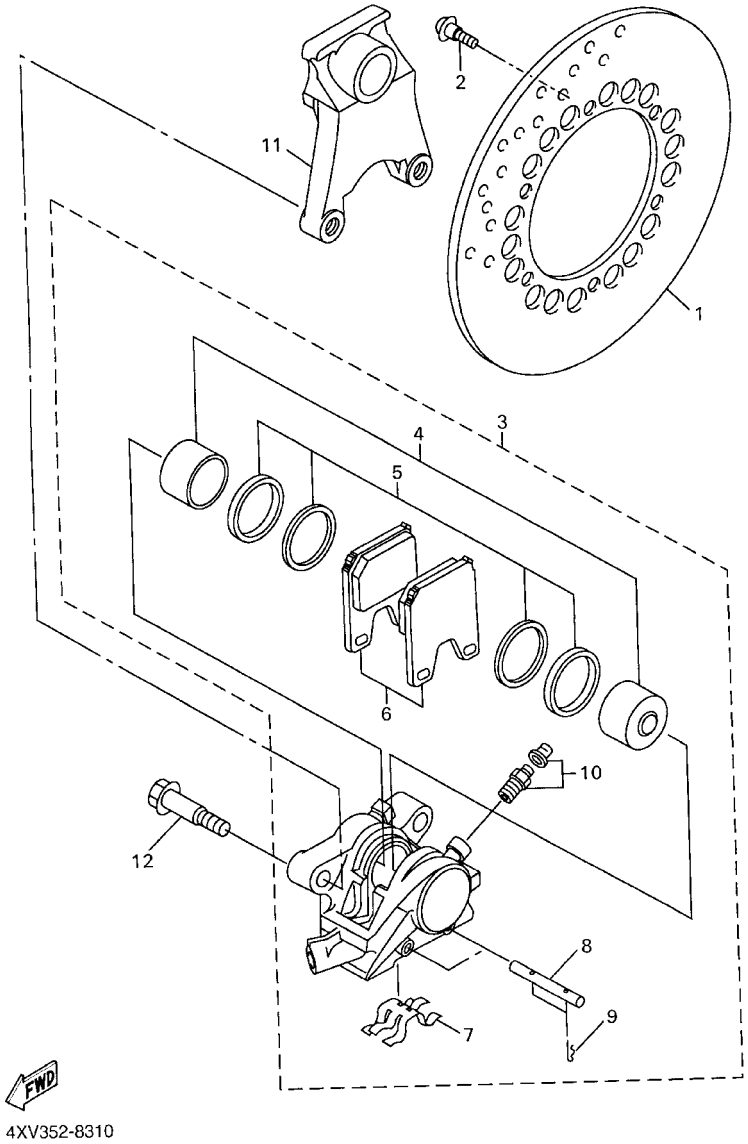

FIG. 32 REAR BRAKE CALIPER

REF. NO.	PART NO.	DESCRIPTION	5JJ1					REMARKS
1	4XV–2582W–00	DISC, REAR BRAKE 2	1					
2	90109–064G6	BOLT	6					
3	5JJ–2580W–00	CALIPER ASSY, REAR 2	1					
4	4XV–W0057–50	.PISTON ASSY, CALIPER	1					
5	4XV–W0047–50	..CALIPER SEAL KIT	1					
6	5FL–W0046–50	.BRAKE PAD KIT 2	1					
7	4XV–25919–50	.SUPPORT, PAD	1					
8	4SV–25924–00	.PIN, PAD	2					
9	3GM–25925–00	.CLIP	4					
10	1J3–W0048–00	.BLEED SCREW KIT	2					
11	4XV–25819–00	BRACKET, CALIPER	1					
12	90105–105A0	BOLT, WASHER BASED	2					

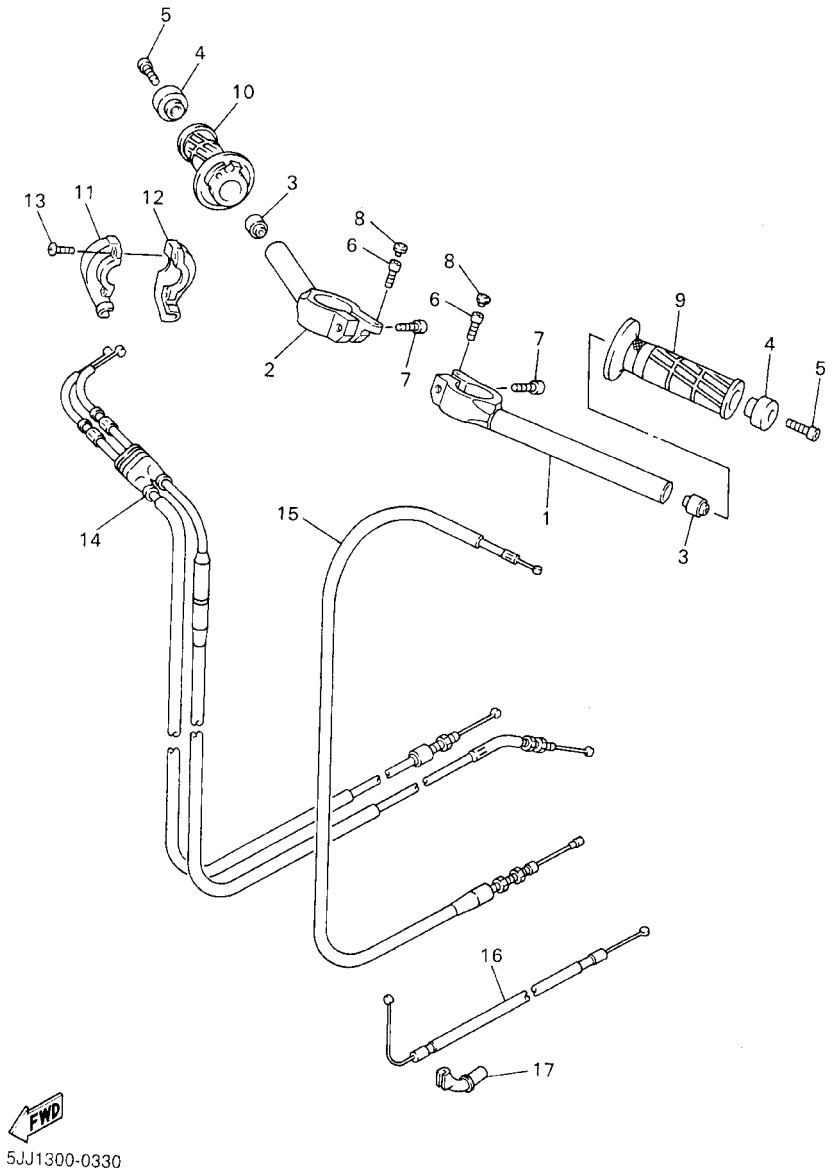

FIG. 33 STEERING HANDLE. CABLE

REF. NO.	PART NO.	DESCRIPTION	5JJ1					REMARKS
1	4XV–26121–00	HANDLEBAR (LEFT)	1					
2	4XV–26122–00	HANDLEBAR (RIGHT)	1					
3	4JH–23434–00	HOLDER, DAMPER	2					
4	4XV–26246–00	END, GRIP	2					
5	91317–06025	BOLT	2					
6	91317–06025	BOLT	2					
7	91314–08030	BOLT	2					
8	2H9–23469–00	CAP, BOLT	2					
9	4YR–26241–01	GRIP (LEFT)	1					
10	4YR–26240–01	GRIP ASSY	1					
11	3XW–26282–01	CAP, GRIP LOWER	1					
12	3XW–26281–01	CAP, GRIP UPPER	1					
13	98507–05035	SCREW, PAN HEAD	2					
14	4XV–26302–01	THROTTLE CABLE ASSY	1					
15	5JJ–26335–00	CABLE, CLUTCH	1					
16	5JJ–26331–00	CABLE, STARTER 1	1					
17	5JJ–26399–00	GUIDE, CABLE	1					

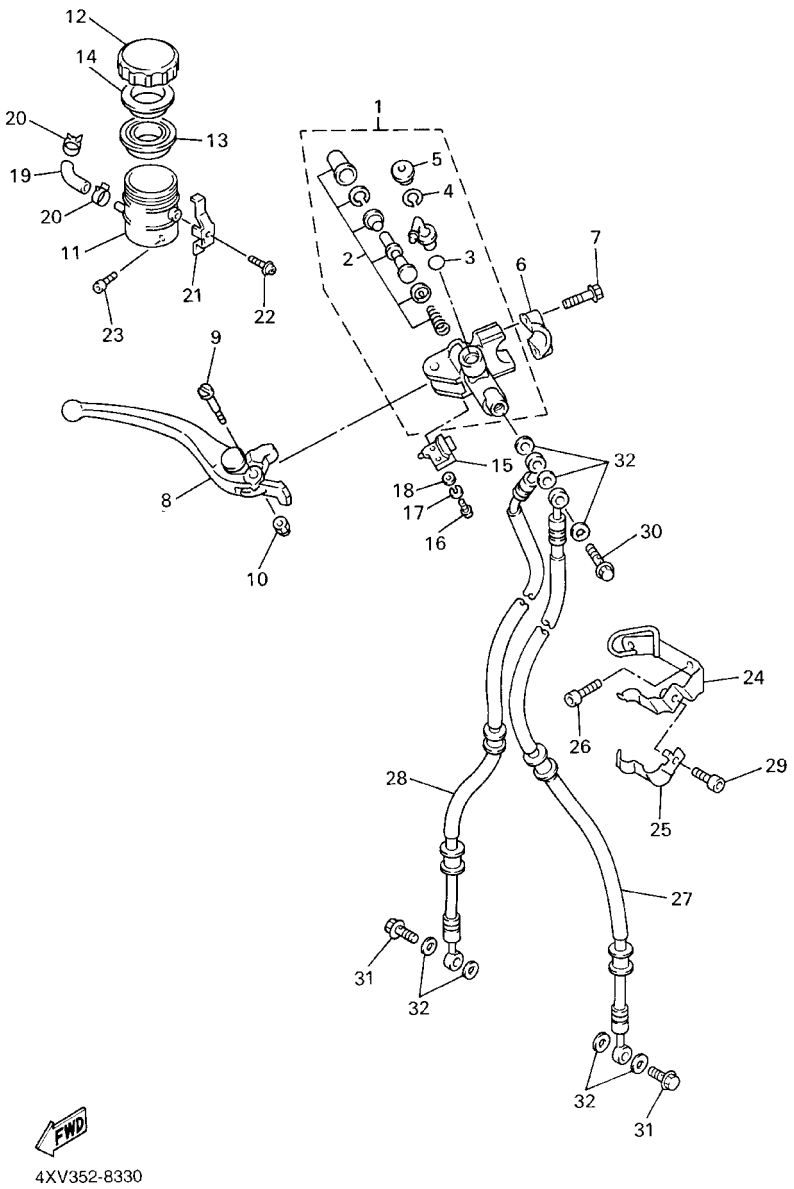

FIG. 34 FRONT MASTER CYLINDER

REF. NO.	PART NO.	DESCRIPTION	5JJ1					REMARKS
1	5JJ–W2587–00	MASTER CYLINDER SUB ASSY	1					
2	5JJ–W0041–00	.CYLINDER KIT, MASTER	1					
3	93210–15620	.O–RING	1					
4	2VN–25866–00	.CIRCLIP	1					
5	3FV–2589A–00	.COVER, DUST	1					
6	56A–25867–00	BRACKET, MASTER CYLINDER	1					
7	5EB–26332–00	BOLT	2					
8	4XV–83922–01	LEVER 2	1					
9	3FV–2589F–00	BOLT, LEVER	1					
10	95606–06100	NUT, U	1					
11	5JJ–25894–10	TANK, RESERVOIR	1					
12	3GM–25852–50	CAP, RESERVOIR	1					
13	3FV–25854–00	DIAPHRAGM, RESERVOIR	1					
14	2J2–25855–50	BUSH,DIAPHRAGM	1					
15	3FV–83980–00	FRONT STOP SWITCH ASSY	1					
16	98502–04012	SCREW, PAN HEAD	1					
17	92902–04100	WASHER, SPRING	1					
18	92902–04600	WASHER, PLATE	1					
19	3TJ–2582F–01	HOSE	1					
20	3PA–24356–00	CLIP, PIPE 1	2					
21	3FV–2589G–00	HOLDER	1					
22	3GM–2589H–00	SCREW	1					
23	91317–06012	BOLT	1					
24	4XV–25887–00	HOLDER, BRAKE HOSE	1					
25	4XV–2587A–00	HOLDER, BREAK HOSE	1					
26	91317–06012	BOLT	2					
27	4XV–25872–00	HOSE, BRAKE 1	1					

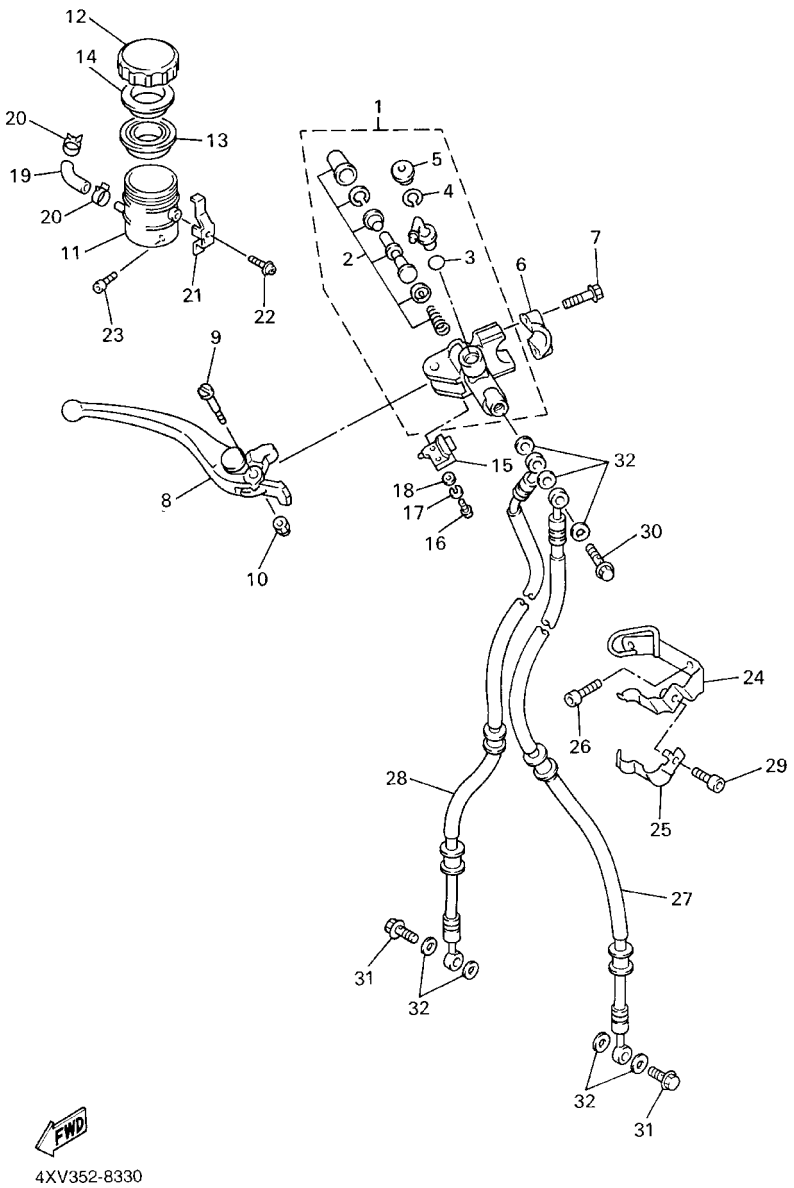

FIG. 34 FRONT MASTER CYLINDER

REF. NO.	PART NO.	DESCRIPTION	5JJ1					REMARKS
28	4XV–25873–00	HOSE, BRAKE 2	1					
29	91317–06010	BOLT	1					
30	90401–10160	BOLT, UNION	1					
31	90401–10172	BOLT, UNION	2					
32	90201–10118	WASHER, PLATE	7					

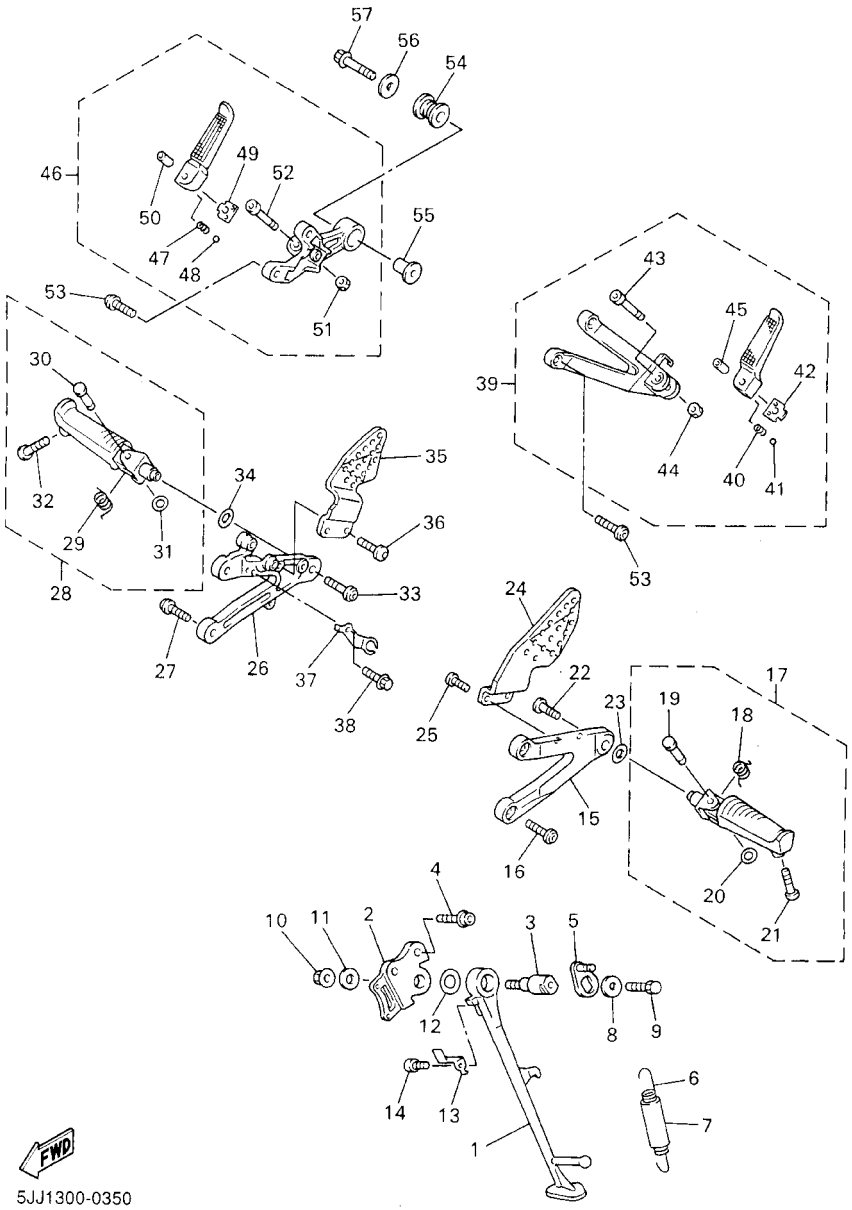

FIG. 35 STAND. FOOTREST

REF. NO.	PART NO.	DESCRIPTION	5JJ1					REMARKS
1	4XV–27311–00	STAND, SIDE	1					
2	5JJ–27321–00	BRACKET, SIDE STAND	1					
3	4NX–27351–00	GUIDE, SIDE STAND	1					
4	90109–10002	BOLT	2					
5	5EB–27352–00	HOOK, SIDE STAND	1					
6	90506–18003	SPRING, TENSION	1					
7	90445–19002	HOSE	1					
8	90201–081R9	WASHER, PLATE	1					
9	90101–08662	BOLT	1					
10	95607–10200	NUT, SELF–LOCKING	1					
11	90201–101J1	WASHER, PLATE	1					
12	90201–146F9	WASHER, PLATE	1					
13	5JJ–27315–00	LINK, SIDE STAND	1					
14	90110–06226	BOLT, HEXAGON SOCKET HEAD	1					
15	5JJ–27442–00	BRACKET 2	1					
16	90109–085G6	BOLT	2					
17	5JJ–27410–00	FRONT FOOTREST ASSY (LEFT)	1					
18	90508–18134	.SPRING, TORSION	1					
19	90243–08029	.PIN	1					
20	90201–06042	.WASHER, PLATE	1					
21	90109–083E0	.BOLT	1					
22	90149–08296	SCREW	1					
23	90201–13008	WASHER, PLATE	1					
24	5JJ–27445–00	PLATE 1	1					
25	90149–06233	SCREW	2					
26	5JJ–27443–00	BRACKET 3	1					
27	90109–085G6	BOLT	2					

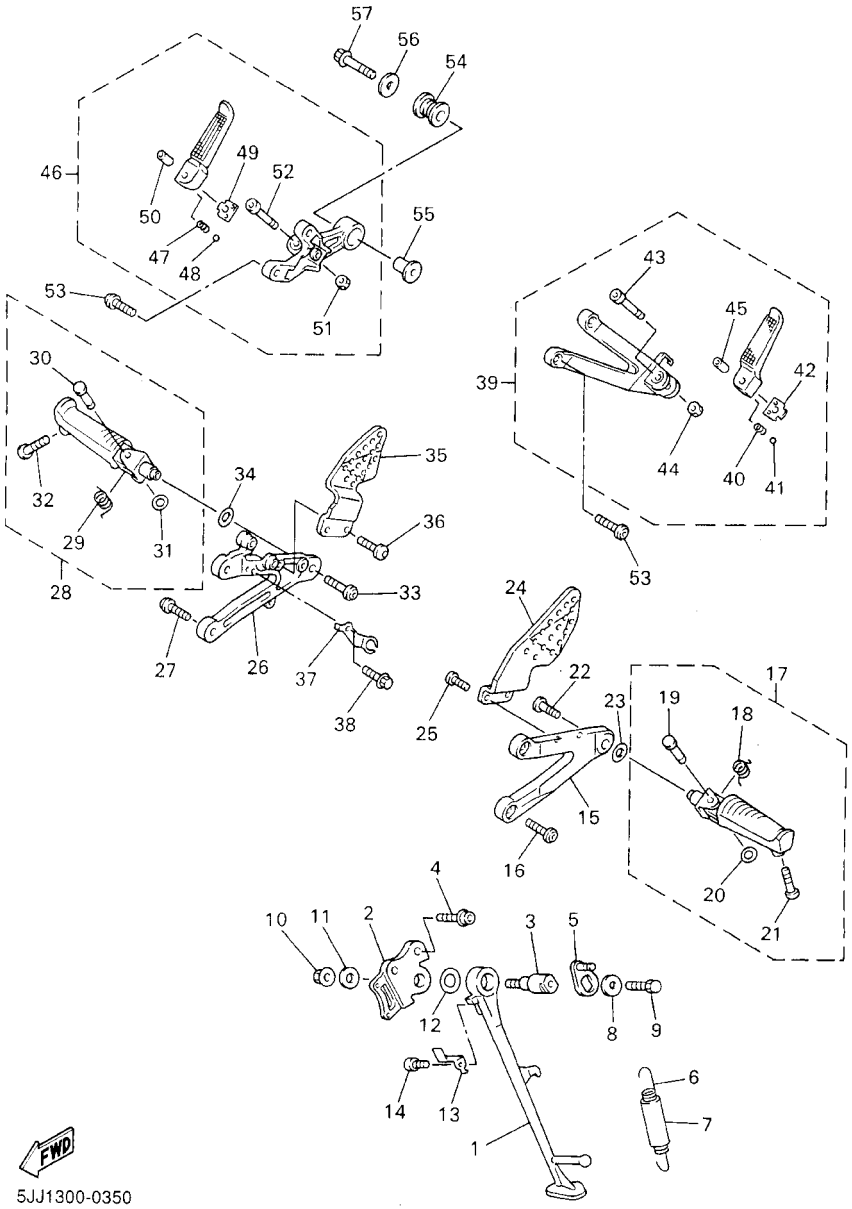

FIG. 35 STAND. FOOTREST

REF. NO.	PART NO.	DESCRIPTION	5JJ1					REMARKS
28	5JJ–27420–00	FRONT FOOTREST ASSY (RIGHT)	1					
29	90508–18135	.SPRING, TORSION	1					
30	90243–08029	.PIN	1					
31	90201–06042	.WASHER, PLATE	1					
32	90109–083E0	.BOLT	1					
33	90149–08296	SCREW	1					
34	90201–13008	WASHER, PLATE	1					
35	5JJ–27446–00	PLATE 2	1					
36	90149–06233	SCREW	2					
37	3XV–2144G–00	STAY, STOP SWITCH	1					
38	95807–06008	BOLT, FLANGE	1					
39	5JJ–27430–00	REAR FOOTREST ASSY 1	1					
40	90501–12743	.SPRING, COMPRESSION	1					
41	93501–04011	.BALL	1					
42	5JJ–27437–00	.WASHER, SPECIAL	1					
43	91314–06035	.BOLT	1					
44	95604–06200	.NUT, U FLANGE	1					
45	90387–06697	.COLLAR	1					
46	5JJ–27440–00	REAR FOOTREST ASSY 2	1					
47	90501–12743	.SPRING, COMPRESSION	1					
48	93501–04011	.BALL	1					
49	5JJ–27437–00	.WASHER, SPECIAL	1					
50	90387–06697	.COLLAR	1					
51	95604–06200	.NUT, U FLANGE	1					
52	91314–06035	.BOLT	1					
53	90109–085G6	BOLT	4					
54	36Y–27424–00	DAMPER, FOOTREST 2	1					

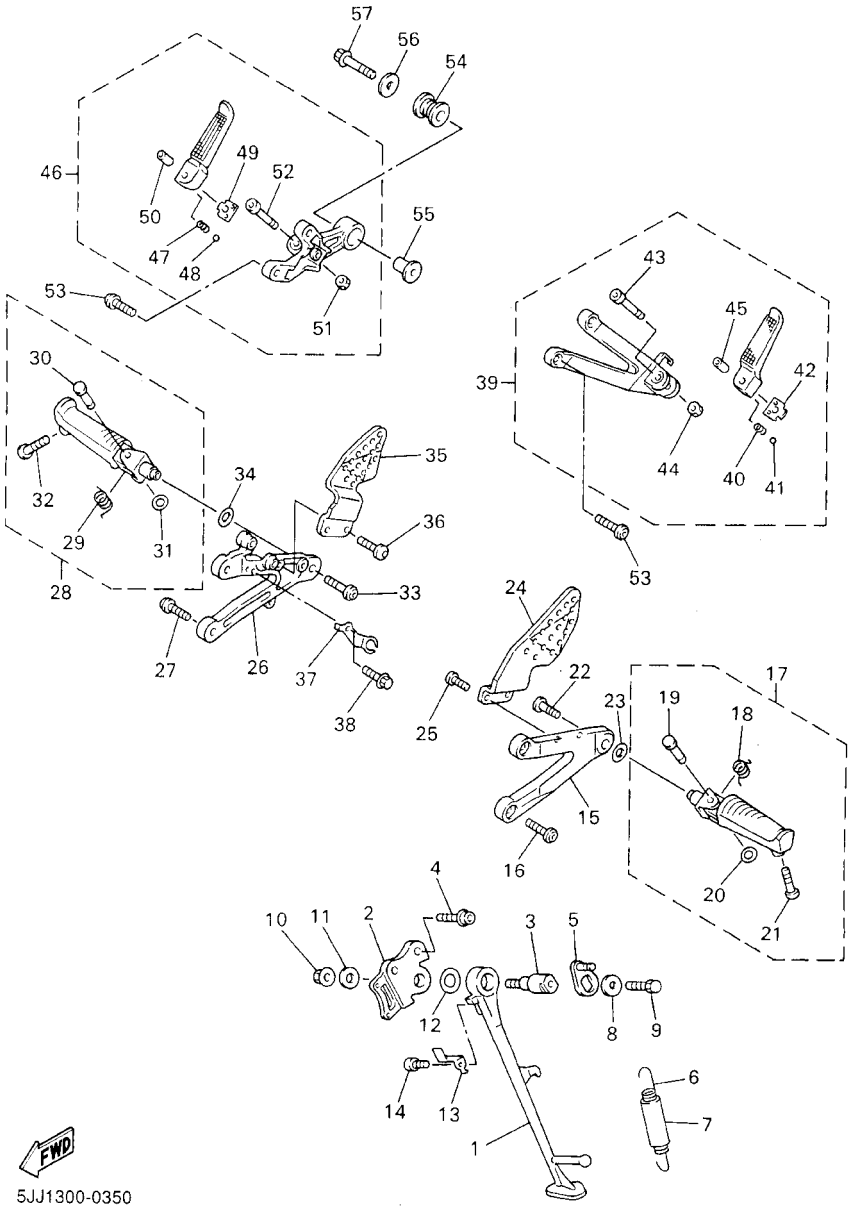

FIG. 35 STAND. FOOTREST

REF. NO.	PART NO.	DESCRIPTION	5JJ1					REMARKS
55	90387–10001	COLLAR	1					
56	90201–10669	WASHER, PLATE	1					
57	90105–10022	BOLT, WASHER BASED	1					

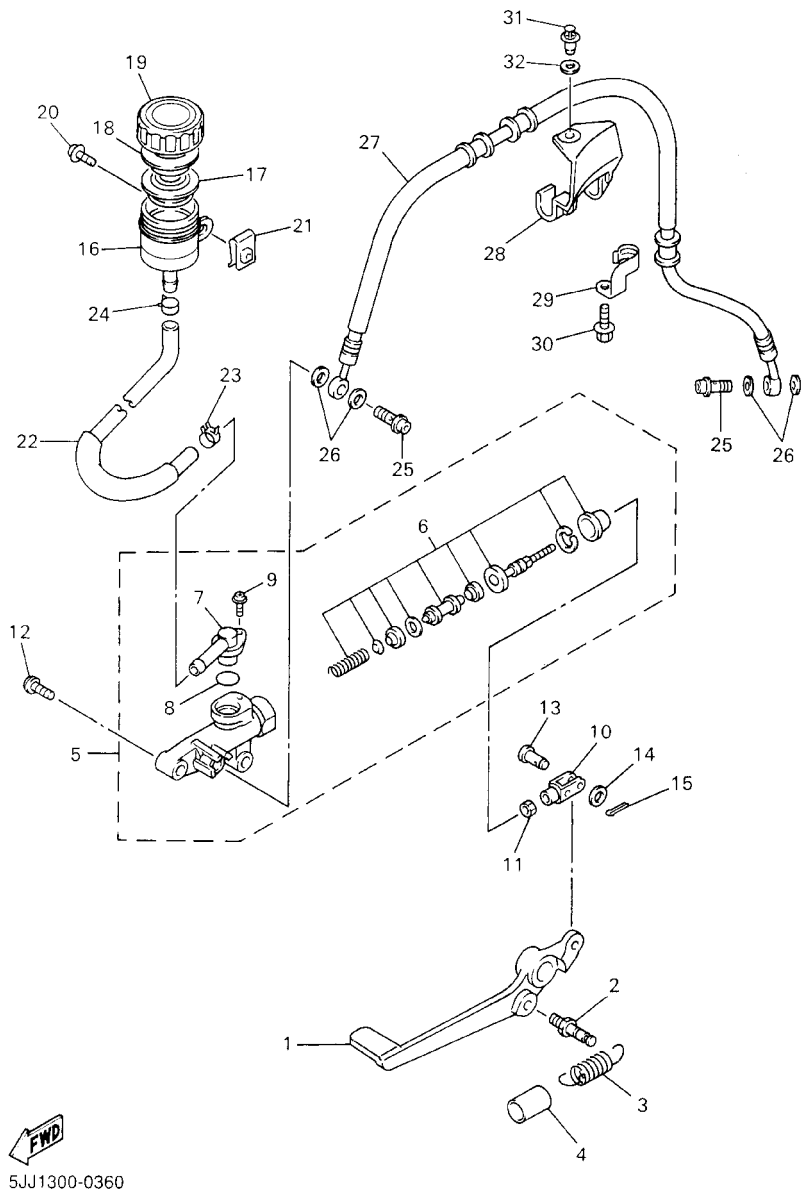

FIG. 36 REAR MASTER CYLINDER

REF. NO.	PART NO.	DESCRIPTION	5JJ1					REMARKS
1	5JJ–27211–00	PEDAL, BRAKE	1					
2	5JJ–27813–00	PIN, PEDAL CRANK	1					
3	90506–20377	SPRING, TENSION	1					
4	90446–17346	HOSE	1					
5	3TU–2583V–01	RR. MASTER CYLINDER ASSY.	1					
6	3TU–W0042–51	.CYLINDER KIT, MASTER	1					
7	3LN–2582A–00	.JOINT	1					
8	3LN–2585F–00	.O–RING	1					
9	3LN–2585H–00	.SCREW,SET	1					
10	4XV–27222–01	JOINT	1					
11	95304–08700	NUT	1					
12	90109–06013	BOLT	2					
13	91701–06018	PIN, CLEVIS	1					
14	92907–06200	WASHER	1					
15	91401–16012	PIN, COTTER	1					
16	5JJ–25894–00	TANK, RESERVOIR	1					
17	2VN–25854–00	DIAPHRAGM, RESERVOIR	1					
18	2VN–25855–00	BUSH,DIAPHRAGM	1					
19	3XP–25852–50	CAP, RESERVOIR	1					
20	90159–06056	SCREW, WITH WASHER	1					
21	90183–06053	NUT, SPRING	1					
22	5JJ–25895–00	HOSE, RESERVOIR	1					
23	90467–14057	CLIP	1					
24	90467–12191	CLIP	1					
25	90401–10172	BOLT, UNION	2					
26	90201–10118	WASHER, PLATE	4					
27	4XV–25874–00	HOSE, BRAKE	1					

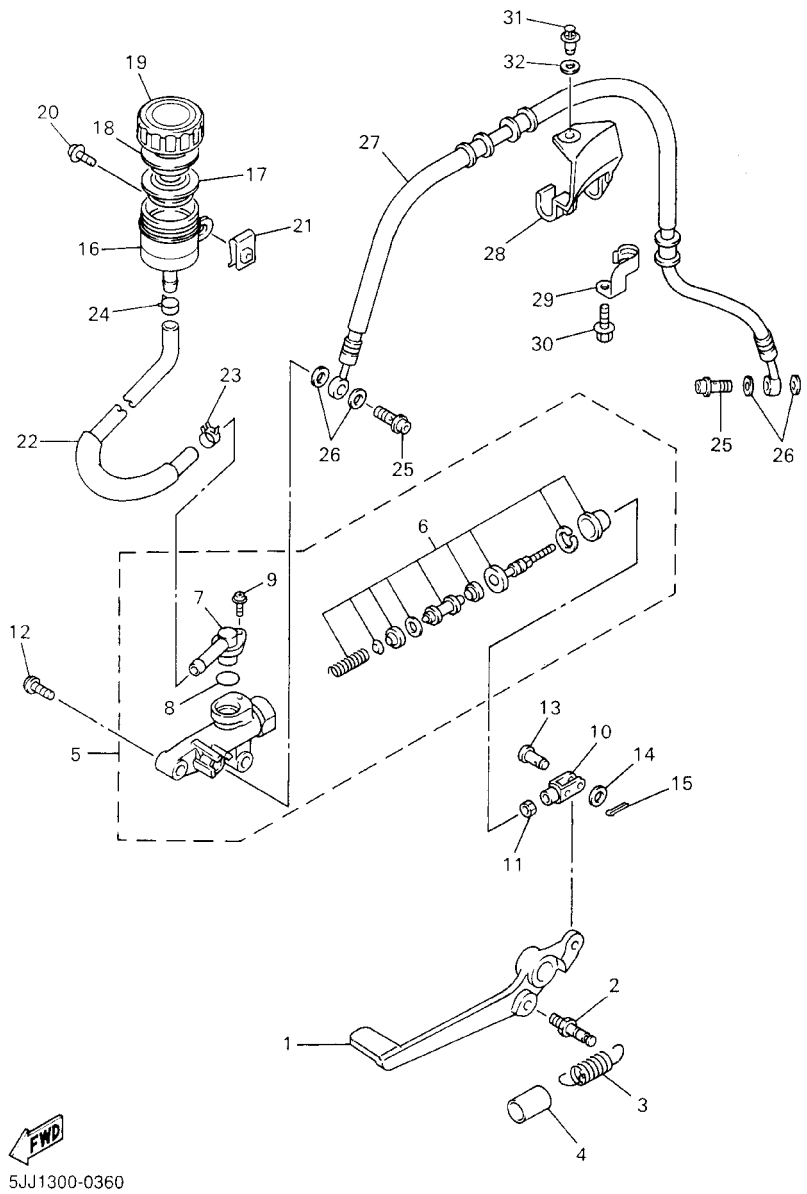

FIG. 36 REAR MASTER CYLINDER

REF. NO.	PART NO.	DESCRIPTION	5JJ1					REMARKS
28	4XV–25886–01	HOLDER, BRAKE HOSE	1					
29	4FM–25876–00	HOLDER, BRAKE HOSE 2	1					
30	95027–06010	BOLT, FLANGE	1					
31	90269–08001	RIVET	1					
32	5JJ–22332–00	DAMPER, CHAIN CASE	1					

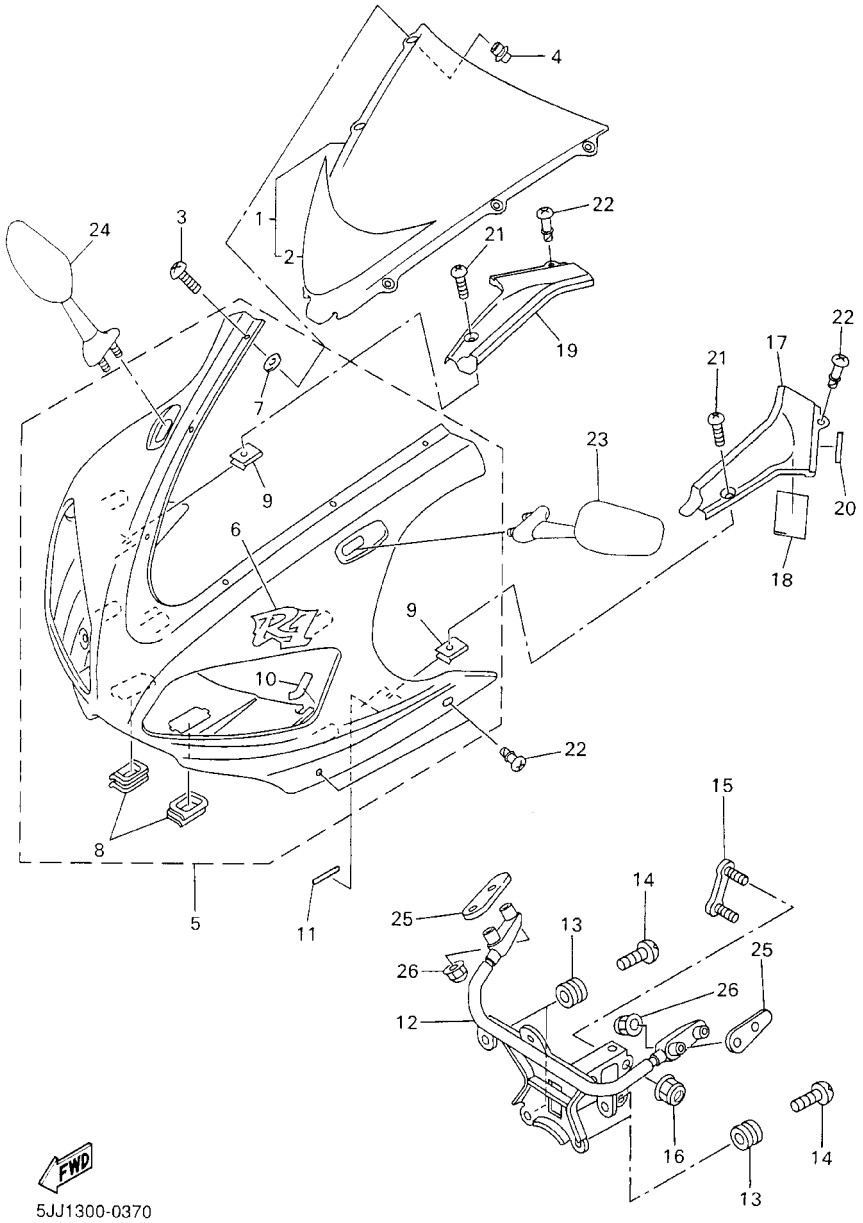

FIG. 37 COWLING 1

REF. NO.	PART NO.	DESCRIPTION	5JJ1					REMARKS
1	5JJ–Y2881–00	WINDSHIELD	1					
2	5JJ–2832P–01	.GRAPHIC 18	1					
3	90150–05023	SCREW, ROUND HEAD	6					
4	90179–05523	NUT	6					
5	5JJ–Y283G–10–0X	BODY, FRONT UPPER 1	1					UR VRC1/BL2
	5JJ–Y283G–00–1X	BODY, FRONT UPPER 1	1					UR DPBMC
6	4XV–28315–20	.EMBLEM	1					UR FOR VRC1
	4XV–28315–30	.EMBLEM	1					UR FOR DPBMC
7	5JJ–2834W–00	.PROTECTOR 2	6					
8	4XV–28349–00	.CAP	2					
9	90183–05074	.NUT, SPRING	2					
10	1LJ–2414J–00	.DAMPER, PLATE 2	2					
11	4XV–2834E–00	DAMPER	2					
12	5JJ–28356–01	STAY 1	1					
13	4XV–83513–00	DAMPER	4					
14	90164–05014	SCREW, TAPPING	4					
15	4XV–28336–00	PLATE	1					
16	95607–08200	NUT, SELF–LOCKING	2					
17	4XV–2837L–00	PANEL, CONSOLE 1	1					
18	1TX–28371–00	DAMPER	1					
19	4XV–2837M–00	PANEL, CONSOLE 2	1					
20	4EU–24141–00	PROTECTOR, FUEL TANK	2					
21	90154–05013	SCREW, BINDING	2					
22	3XV–28386–00	HEAD	6					
23	5JJ–26280–00	REAR VIEW MIRROR ASSY(LEFT)	1					
24	5JJ–26290–00	REAR VIEW MIRROR ASSY(RIGHT)	1					
25	4SV–26298–00	PLATE, MIRROR FITTING 1	2					

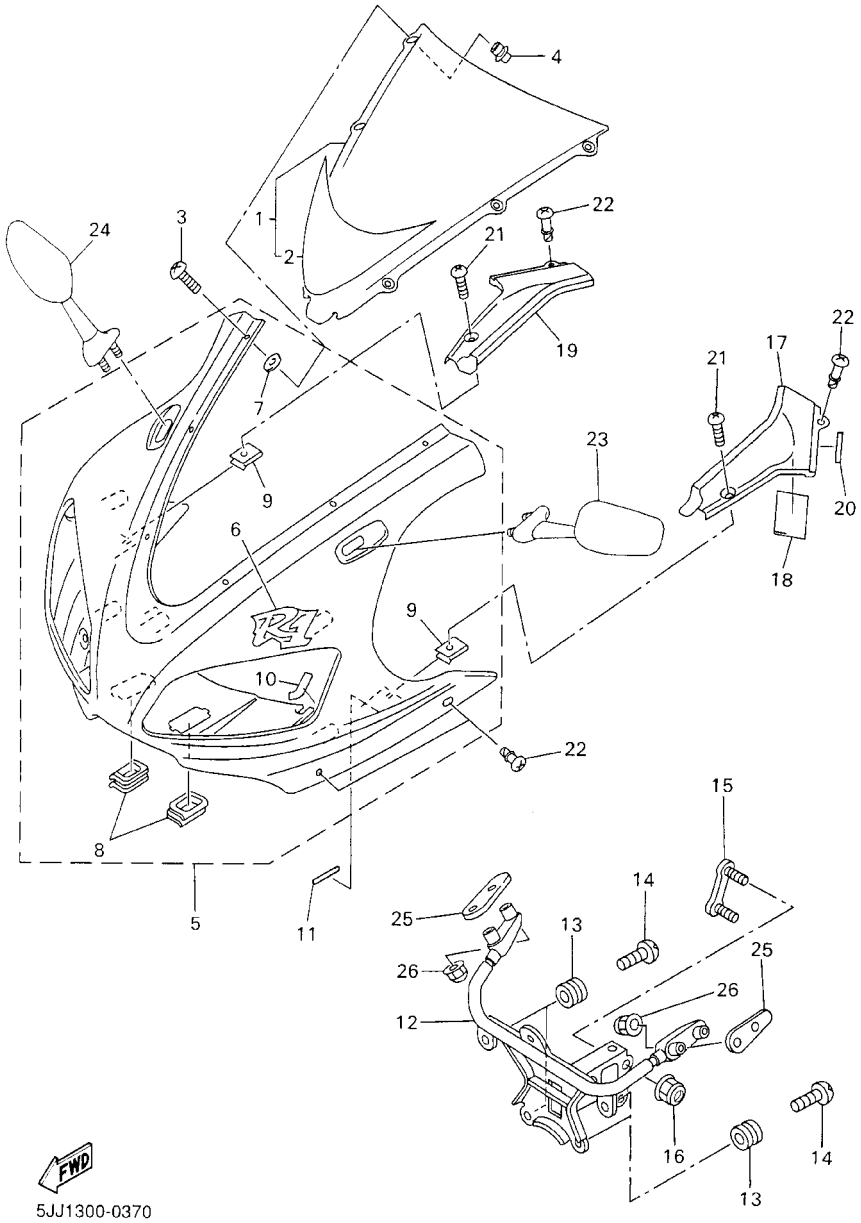

FIG. 37 COWLING 1

REF. NO.	PART NO.	DESCRIPTION	5JJ1					REMARKS
26	90176–06055	NUT, CROWN	4					

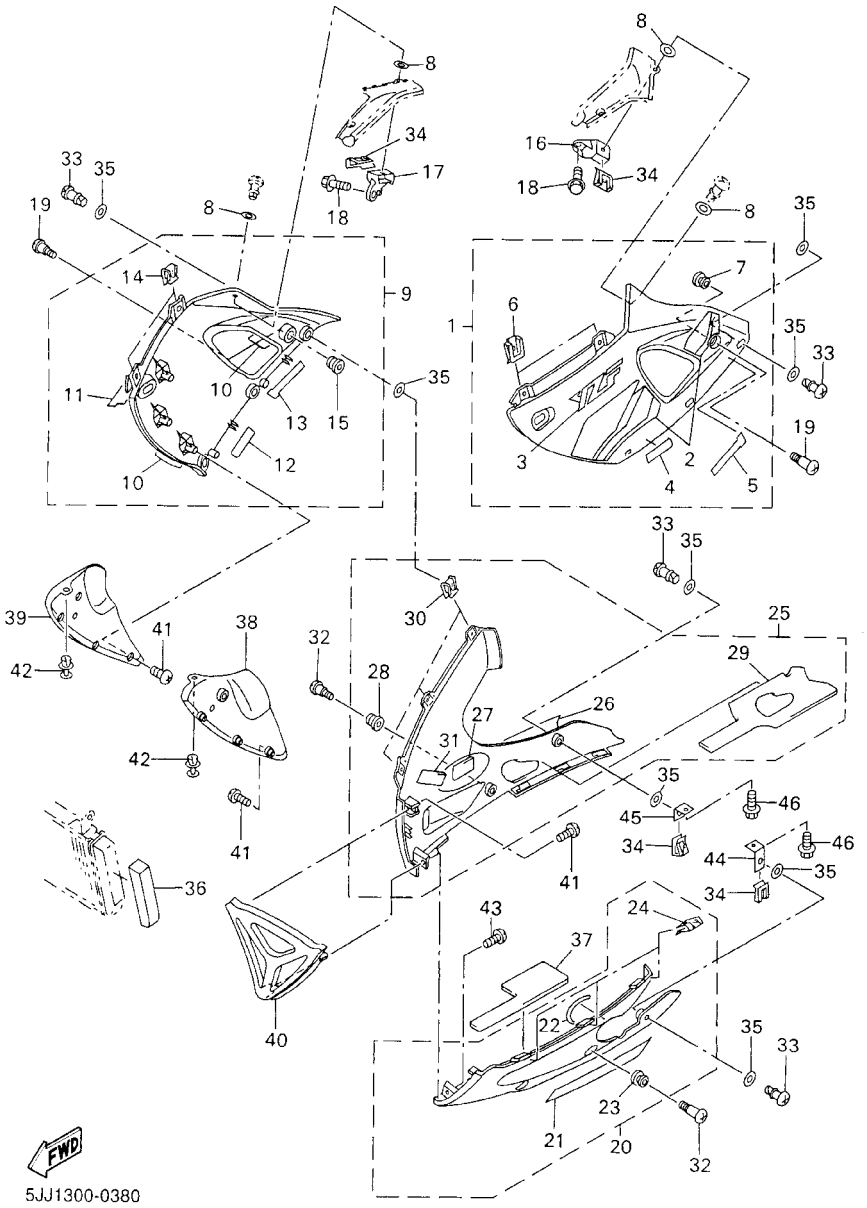

FIG. 38 COWLING 2

REF. NO.	PART NO.	DESCRIPTION	5JJ1					REMARKS
1	4XV–Y283U–50–1X	PANEL ASSEMBLY 1	1					UR VRC1/BWC1
	4XV–Y283U–40–P1	PANEL ASSEMBLY 1	1					UR DPBMC
2	5JJ–28301–00	.GRAPHIC SET, LOWER COVER 1	1					UR FOR VRC1
	5JJ–28301–10	.GRAPHIC SET, LOWER COVER 1	1					UR FOR DPBMC
3	4XV–2839H–50	.EMBLEM 1	1					UR FOR VRC1
	4XV–2839H–60	.EMBLEM 1	1					UR FOR DPBMC
4	4XV–28338–20	.EMBLEM	1					UR FOR VRC1
	4XV–28338–40	.EMBLEM	1					UR FOR DPBMC
5	4XV–28328–20	.EMBLEM	1					UR FOR VRC1
	4XV–28328–50	.EMBLEM	1					UR FOR DPBMC
6	4XV–2177L–00	.PLATE, SPRING	2					
7	90480–13398	.GROMMET	1					
8	2TK–21757–00	WASHER, SPECIAL 1	12					
9	4XV–Y283V–50–1X	PANEL ASSEMBLY 2	1					UR VRC1/BWC1
	4XV–Y283V–40–P1	PANEL ASSEMBLY 2	1					UR DPBMC
10	5JJ–28303–00	.GRAPHIC SET, LOWER COVER 2	1					UR FOR VRC1
	5JJ–28303–10	.GRAPHIC SET, LOWER COVER 2	1					UR FOR DPBMC
11	4XV–2839H–50	.EMBLEM 1	1					UR FOR VRC1
	4XV–2839H–60	.EMBLEM 1	1					UR FOR DPBMC
12	4XV–28338–20	.EMBLEM	1					UR FOR VRC1
	4XV–28338–40	.EMBLEM	1					UR FOR DPBMC
13	4XV–28328–20	.EMBLEM	1					UR FOR VRC1
	4XV–28328–50	.EMBLEM	1					UR FOR DPBMC
14	4XV–2177L–00	.PLATE, SPRING	2					
15	90480–13398	.GROMMET	1					
16	4XV–2836A–00	BRACKET 1	1					
17	4XV–2836E–00	BRACKET 2	1					

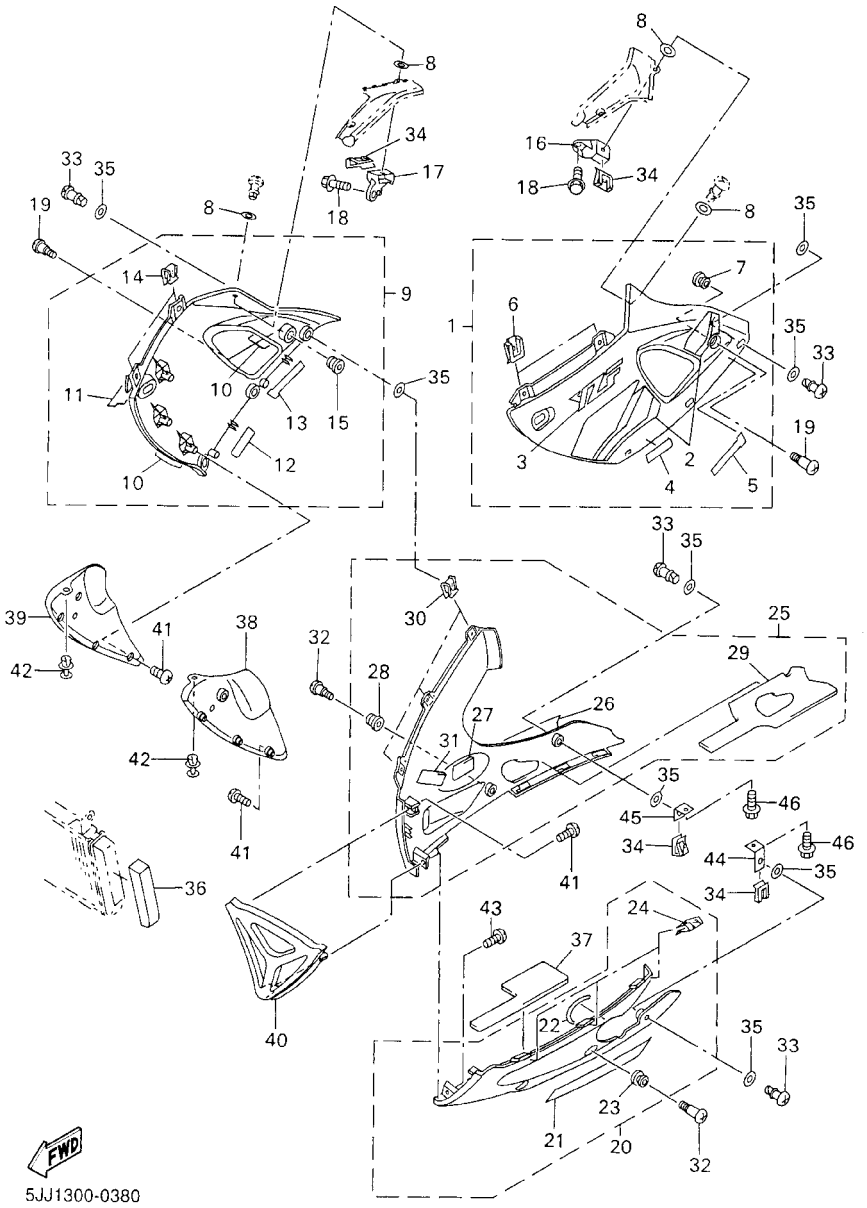

FIG. 38 COWLING 2

REF. NO.	PART NO.	DESCRIPTION	5JJ1					REMARKS
18	90119–06052	BOLT, WITH WASHER	2					
19	90150–06036	SCREW, ROUND HEAD	2					
20	5JJ–Y2808–00–4B	COVER ASSY, UNDER	1					BL2 FOR VRC1
	5JJ–Y2808–00–P0	COVER ASSY, UNDER	1					DPBMC
21	99241–00320	.EMBLEM, YAMAHA	1					
22	4BR–2834E–00	.DAMPER	1					
23	90480–13398	.GROMMET	1					
24	4XV–2177L–00	.PLATE, SPRING	3					
25	5JJ–Y2809–00–4B	COVER ASSY 2, UNDER	1					BL2 FOR VRC1
	5JJ–Y2809–00–P0	COVER ASSY 2, UNDER	1					DPBMC
26	5JJ–2153E–00	.EMBLEM, YAMAHA	1					
27	1TX–28371–00	.DAMPER	1					
28	90480–13398	.GROMMET	1					
29	5JJ–2848M–00	.SEAT 4	1					
30	4XV–2177L–00	.PLATE, SPRING	3					
31	1JK–21735–00	.SEAL 2	1					
32	90150–06036	SCREW, ROUND HEAD	2					
33	3XV–28386–00	HEAD	8					
34	4XV–2177L–00	PLATE, SPRING	4					
35	2TK–21757–00	WASHER, SPECIAL 1	16					
36	4SV–28371–00	DAMPER	1					
37	5JJ–2848L–00	SEAT 3	1					
38	4XV–2836K–10	PANEL, INNER 1	1					
39	4XV–2836L–10	PANEL, INNER 2	1					
40	4XV–2836M–10	PANEL, INNER 3	1					UR FOR VRC1
	4XV–2836M–10–P0	PANEL, INNER 3	1					UR DPBMC
41	97704–40012	SCREW, TAPPING	8					

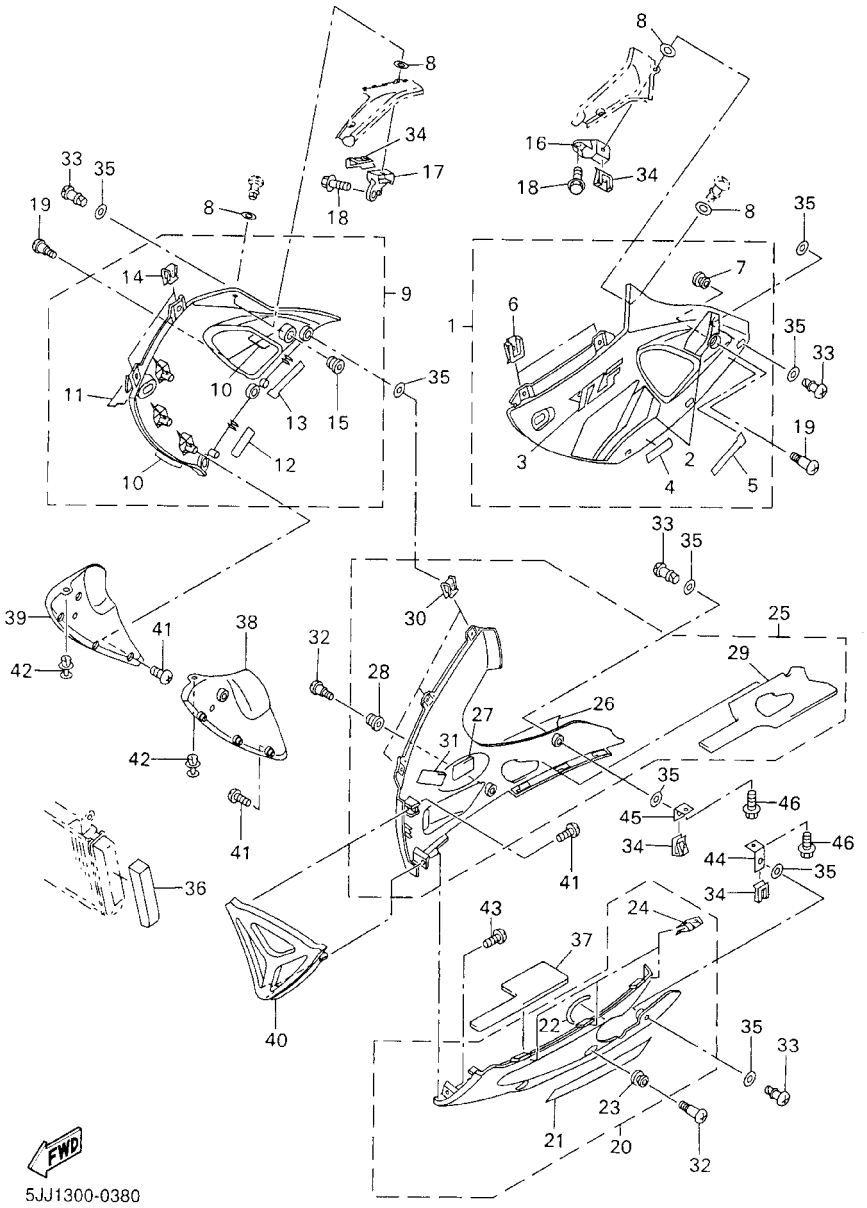

FIG. 38 COWLING 2

REF. NO.	PART NO.	DESCRIPTION	5JJ1					REMARKS
42	90269–07077	RIVET	2					
43	97707–50016	SCREW, TAPPING	3					
44	4XV–2836F–00	BRACKET 3	1					
45	4XV–2836G–00	BRACKET 4	1					
46	95807–06012	BOLT, FLANGE	2					

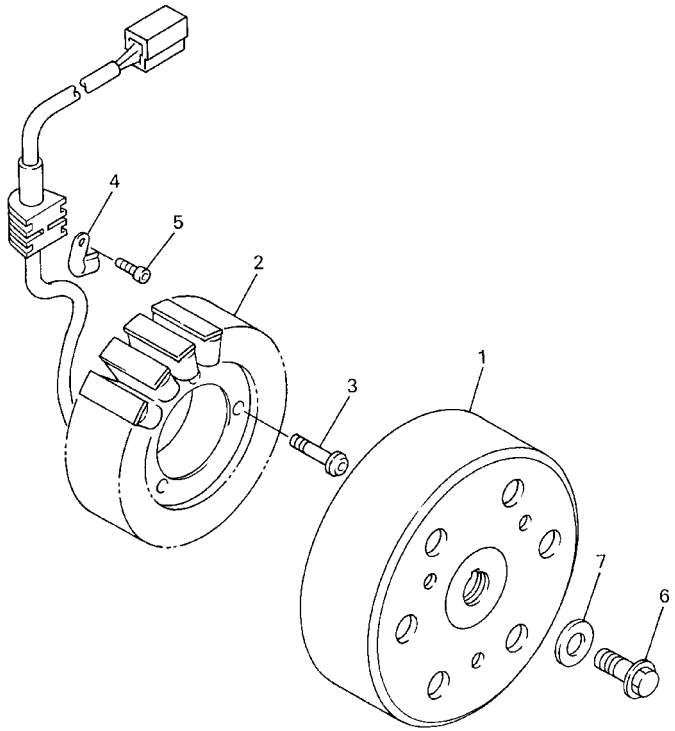

4XV352-8380

FIG. 39 GENERATOR

REF. NO.	PART NO.	DESCRIPTION	5JJ1					REMARKS
1	4XV–81450–00	ROTOR ASSY	1					
2	4XV–81410–00	STATOR ASSY	1					
3	92017–06030	BOLT, BUTTON HEAD	3					
4	90462–10182	CLAMP	1					
5	91317–06012	BOLT	1					
6	90105–105A6	BOLT, WASHER BASED	1					
7	90201–103U7	WASHER, PLATE	1					

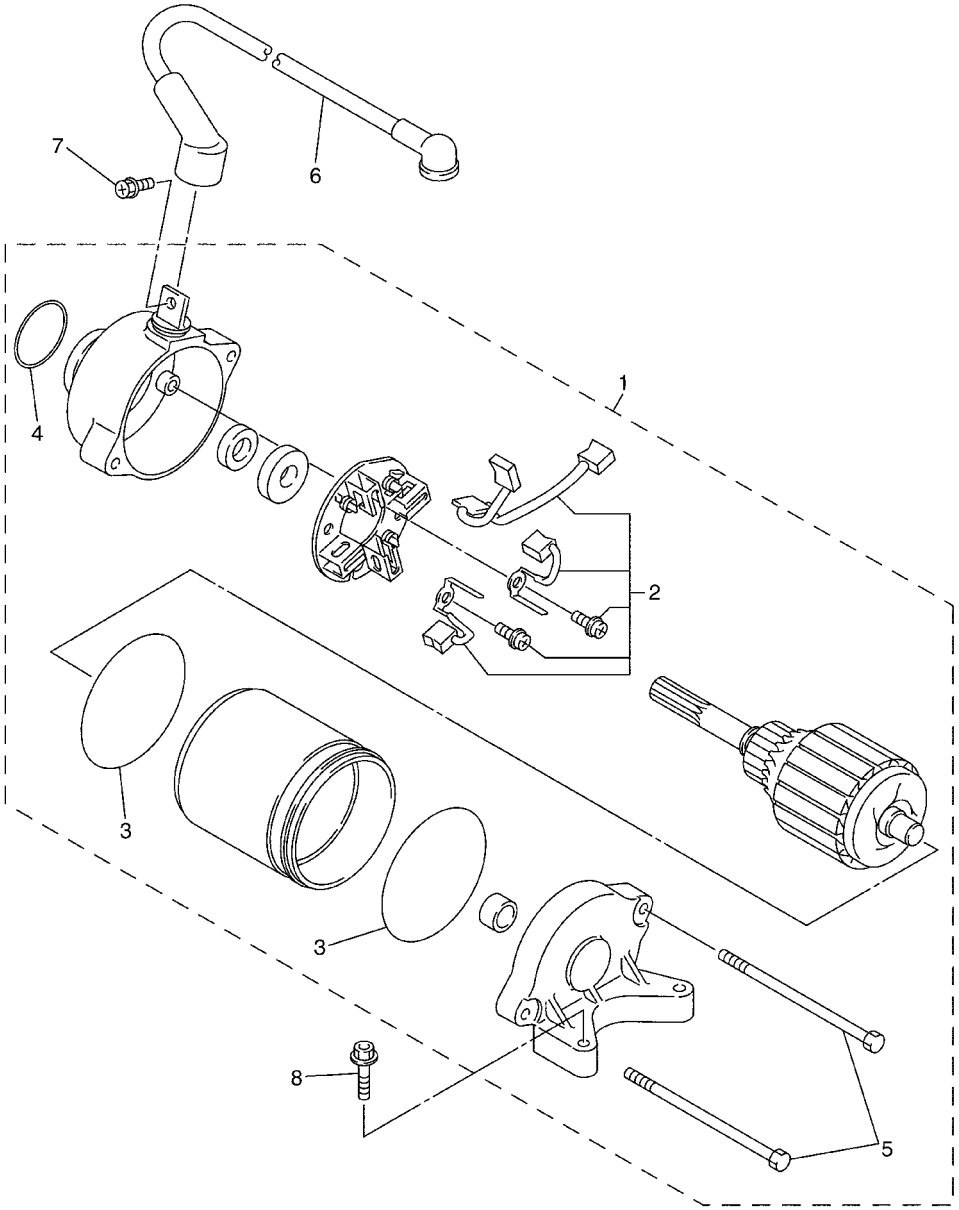

5JJ1300-0400

FIG. 40 STARTING MOTOR

REF. NO.	PART NO.	DESCRIPTION	5JJ1					REMARKS
1	5JJ–81890–00	MOTOR ASSY	1					
2	5JJ–81801–00	.BRUSH SET	1					
3	93210–55669	.O–RING	2					
4	93210–25711	.O–RING	1					
5	5JJ–81846–00	.SCREW	2					
6	5JJ–8183G–00	CORD COMP.	1					
7	5JJ–81828–00	BOLT 2	1					
8	95027–06025	BOLT, FLANGE	2					

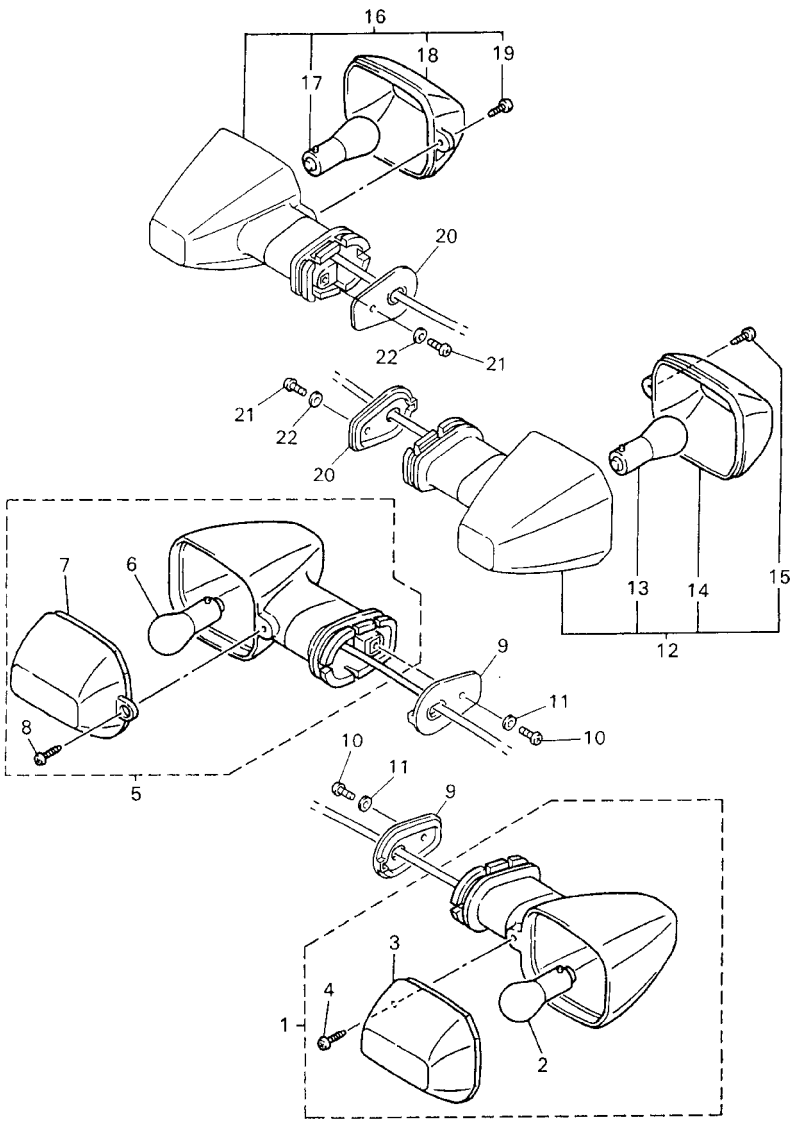

5JJ1300-0410

FIG. 41 FLASHER LIGHT

REF. NO.	PART NO.	DESCRIPTION	5JJ1					REMARKS
1	5JJ–83310–00	FRONT FLASHER LIGHT ASSY 1	1					
2	306–83311–40	.BULB, FLASHER (12V–21W)	1					
3	4JH–83332–00	.LENS, FLASHER	1					
4	97702–40610	.SCREW, TAPPING	1					
5	5JJ–83320–00	FRONT FLASHER LIGHT ASSY 2	1					
6	306–83311–40	.BULB, FLASHER (12V–21W)	1					
7	4JH–83342–00	.LENS, FLASHER 2	1					
8	97702–40610	.SCREW, TAPPING	1					
9	5JJ–83318–00	STAY, FLASHER 1	2					
10	98507–04008	SCREW, PAN HEAD	2					
11	92907–04600	WASHER	2					
12	5JJ–83330–00	REAR FLASHER LIGHT ASSY 1	1					
13	306–83311–40	.BULB, FLASHER (12V–21W)	1					
14	4JH–83332–00	.LENS, FLASHER	1					
15	97702–40610	.SCREW, TAPPING	1					
16	5JJ–83340–00	FLASHER LIGHT ASSY 2	1					
17	306–83311–40	.BULB, FLASHER (12V–21W)	1					
18	4JH–83342–00	.LENS, FLASHER 2	1					
19	97702–40610	.SCREW, TAPPING	1					
20	5JJ–83318–00	STAY, FLASHER 1	2					
21	98507–04008	SCREW, PAN HEAD	2					
22	92907–04600	WASHER	2					

FIG. 42 METER

REF. NO.	PART NO.	DESCRIPTION	5JJ1					REMARKS
1	5JJ–83500–00	SPEEDOMETER ASSY	1					
	5JJ–83500–10	SPEEDOMETER ASSY	1					FOR GBR
2	90164–05014	SCREW, TAPPING	3					
3	4XV–83513–00	DAMPER	3					

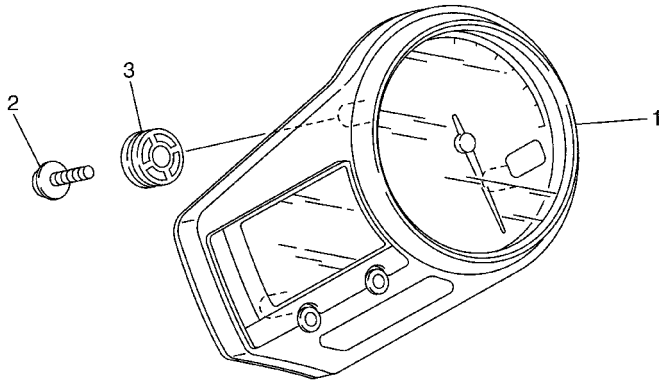

5JJ1300-0420

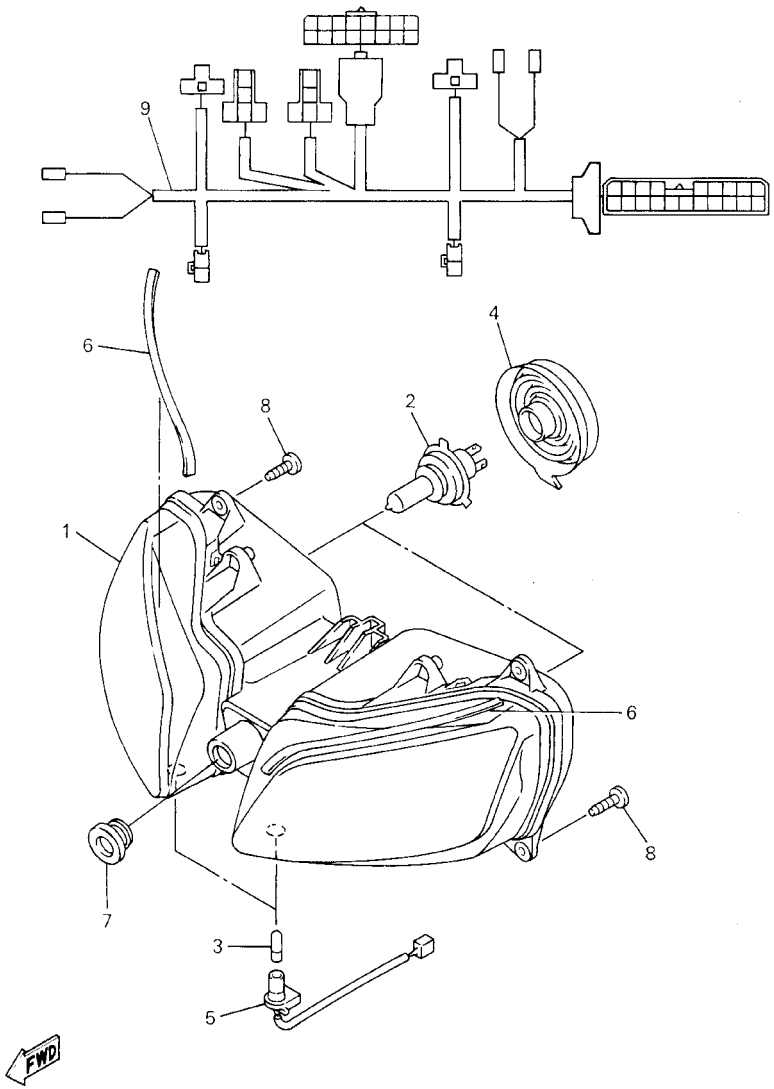

FIG. 43 HEADLIGHT

REF. NO.	PART NO.	DESCRIPTION	5JJ1					REMARKS
1	5JJ–84310–00	HEADLIGHT UNIT ASSY	1					
	5JJ–84310–10	HEADLIGHT UNIT ASSY	1					FOR GBR
2	8V0–84314–00	BULB (12V–60/55W)	2					
3	4SV–84347–00	BULB (12V–5W)	2					
4	4SV–84397–00	COVER, SOCKET	2					
5	5JJ–84312–00	HOLDER, SOCKET	2					
6	J45–78159–00	SEAL, INSPECTION LID	2					
7	90480–18171	GROMMET	1					
8	97707–50016	SCREW, TAPPING	4					
9	5JJ–84359–00	CORD, HEADLIGHT	1					

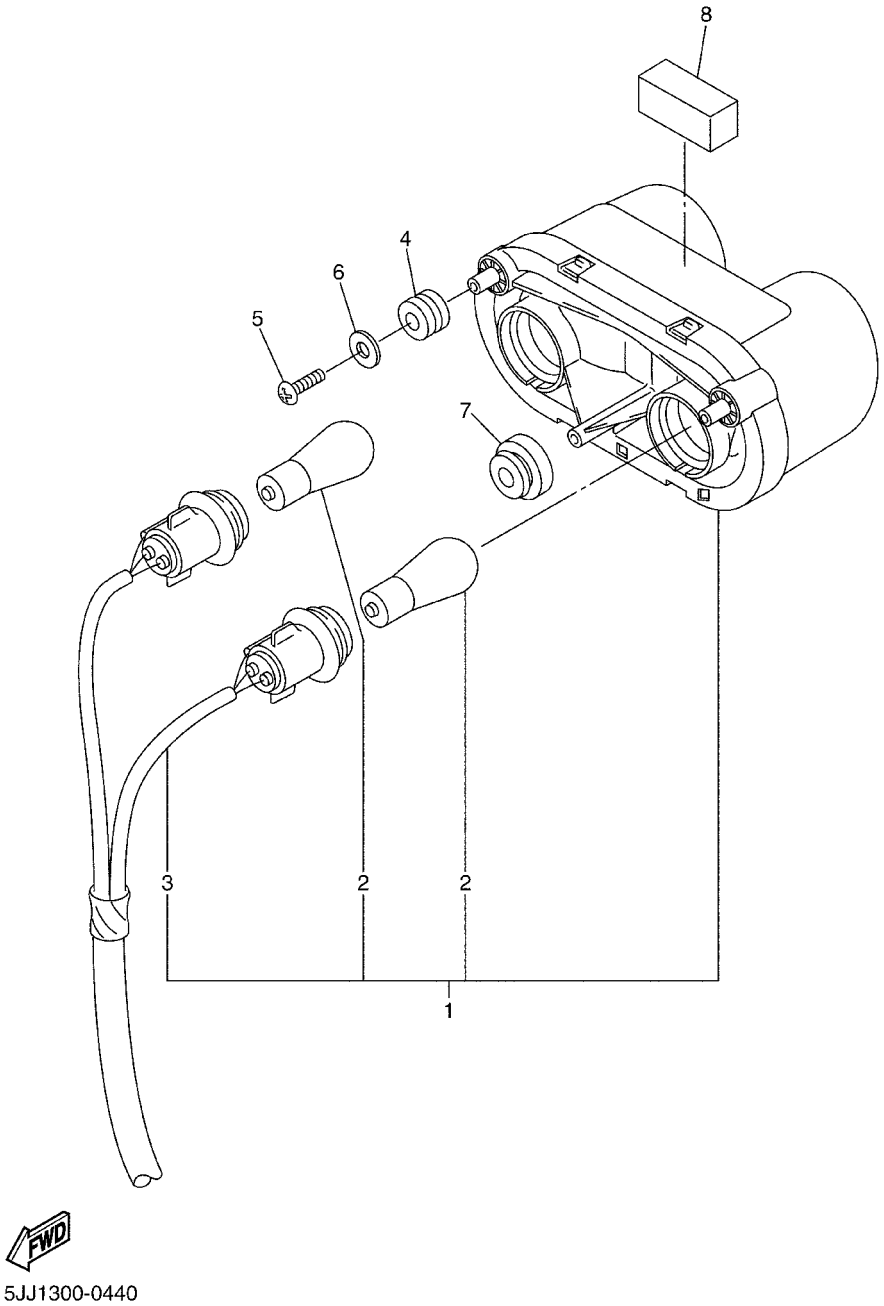

FIG. 44 TAILLIGHT

REF. NO.	PART NO.	DESCRIPTION	5JJ1					REMARKS
1	5JJ–84710–00	TAILLIGHT UNIT ASSY	1					
2	1A2–84714–41	.BULB (12V–21/5W)	2					
3	5JJ–84755–00	.CORD ASSY	1					
4	4XV–83513–00	DAMPER	2					
5	97707–50016	SCREW, TAPPING	2					
6	90201–05725	WASHER, PLATE	2					
7	90480–18171	GROMMET	1					
8	5JJ–21747–00	DAMPER	1					

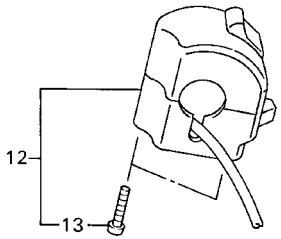

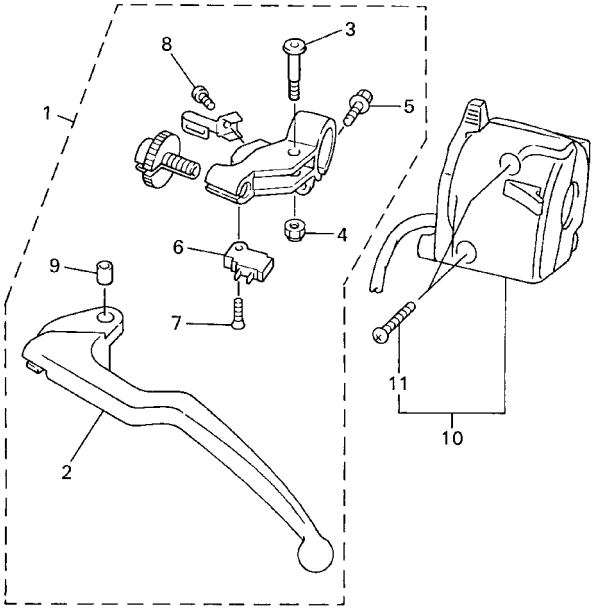

4XV7300-9440

FIG. 45 HANDLE SWITCH. LEVER

REF. NO.	PART NO.	DESCRIPTION	5JJ1					REMARKS
1	4XV–82910–11	LEVER HOLDER ASSY (LEFT)	1					
2	4XV–83912–11	.LEVER 1	1					
3	4XV–83945–00	.BOLT, LEVER	1					
4	95607–06100	.NUT, U	1					
5	95027–06020	.BOLT, FLANGE	1					
6	4XV–82917–00	.SWITCH	1					
7	98707–03016	.SCREW, FLAT HEAD	1					
8	98507–04010	.SCREW, PAN HEAD	1					
9	5JJ–83913–00	.COLLAR, LEVER 1	1					
10	5JJ–83972–00	SWITCH, HANDLE 4	1					
11	98507–05025	.SCREW, PAN HEAD	2					
12	5DM–83963–01	SWITCH, HANDLE 3 (RIGHT)	1					
13	98507–05045	.SCREW, PAN HEAD	2					

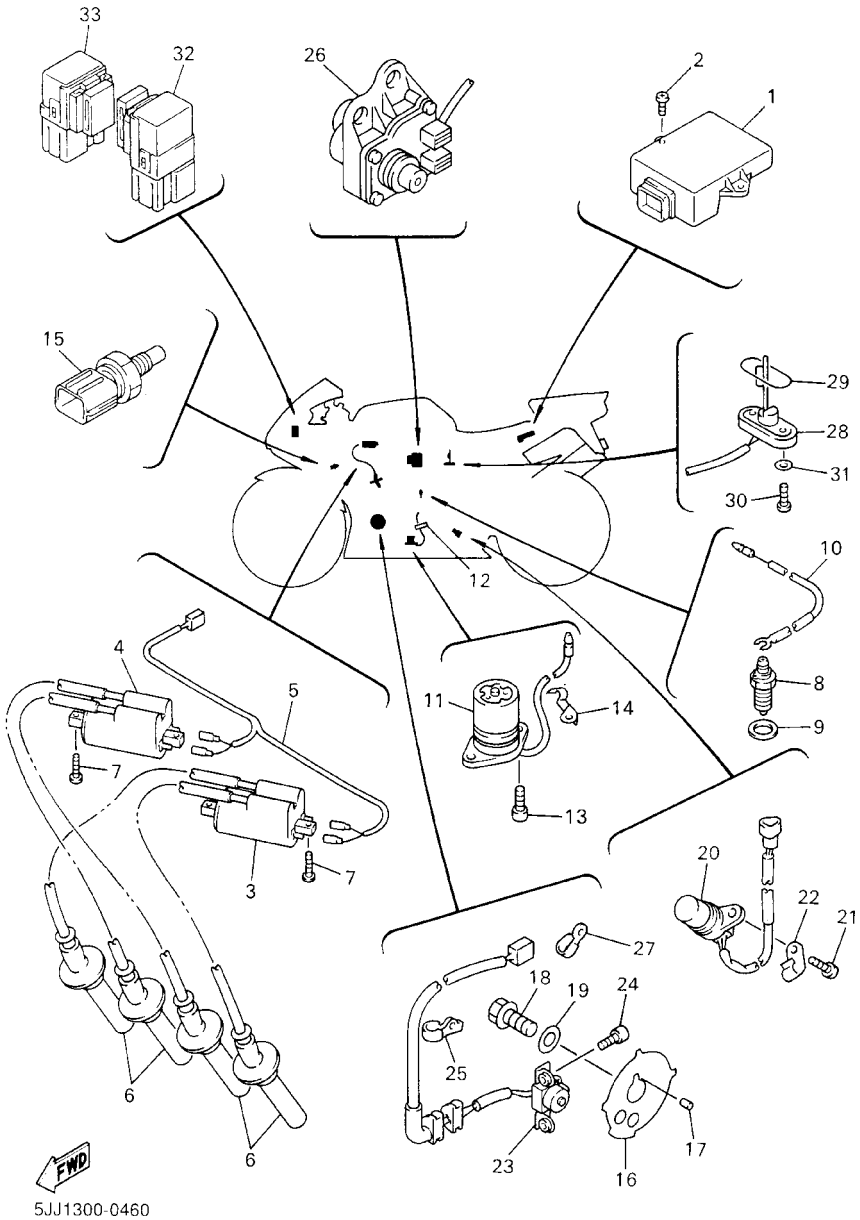

FIG. 46 ELECTRICAL 1

REF. NO.	PART NO.	DESCRIPTION	5JJ1					REMARKS
1	5JJ–82305–00	IGNITOR UNIT ASSY	1					
2	97707–50016	SCREW, TAPPING	2					
3	4XV–82310–00	IGNITION COIL ASSY	1					
4	4XV–82320–00	IGNITION COIL ASSY	1					
5	4XV–82309–00	WIRE, SUB LEAD	1					
6	4XV–82370–00	PLUG CAP ASSY	4					
7	97707–60025	SCREW, TAPPING	4					
8	3GB–82540–01	NEUTRAL SWITCH ASSY	1					
9	90430–10148	GASKET	1					
10	5JJ–82541–00	WIRE, LEAD	1					
11	4XV–85720–01	OIL LEVEL GAUGE ASSY	1					
12	5Y9–12491–00	CLAMP 1	1					
13	91317–06014	BOLT	2					
14	90465–08013	CLAMP	1					
15	5JJ–83591–00	THERMO UNIT	1					
16	4XV–81673–00	ROTOR	1					
17	93604–29151	PIN, DOWEL	1					
18	90105–10290	BOLT, WASHER BASED	1					
19	90201–107K6	WASHER, PLATE	1					
20	4XV–83755–01	SENSOR, SPEED	1					
21	91317–06014	BOLT	1					
22	90465–08028	CLAMP	1					
23	4XV–81670–10	PICK–UP ASSY	1					
24	91317–06012	BOLT	2					
25	90465–08191	CLAMP	1					
26	4FM–85820–01	SERVO MOTOR ASSY	1					
27	90462–08225	CLAMP	1					

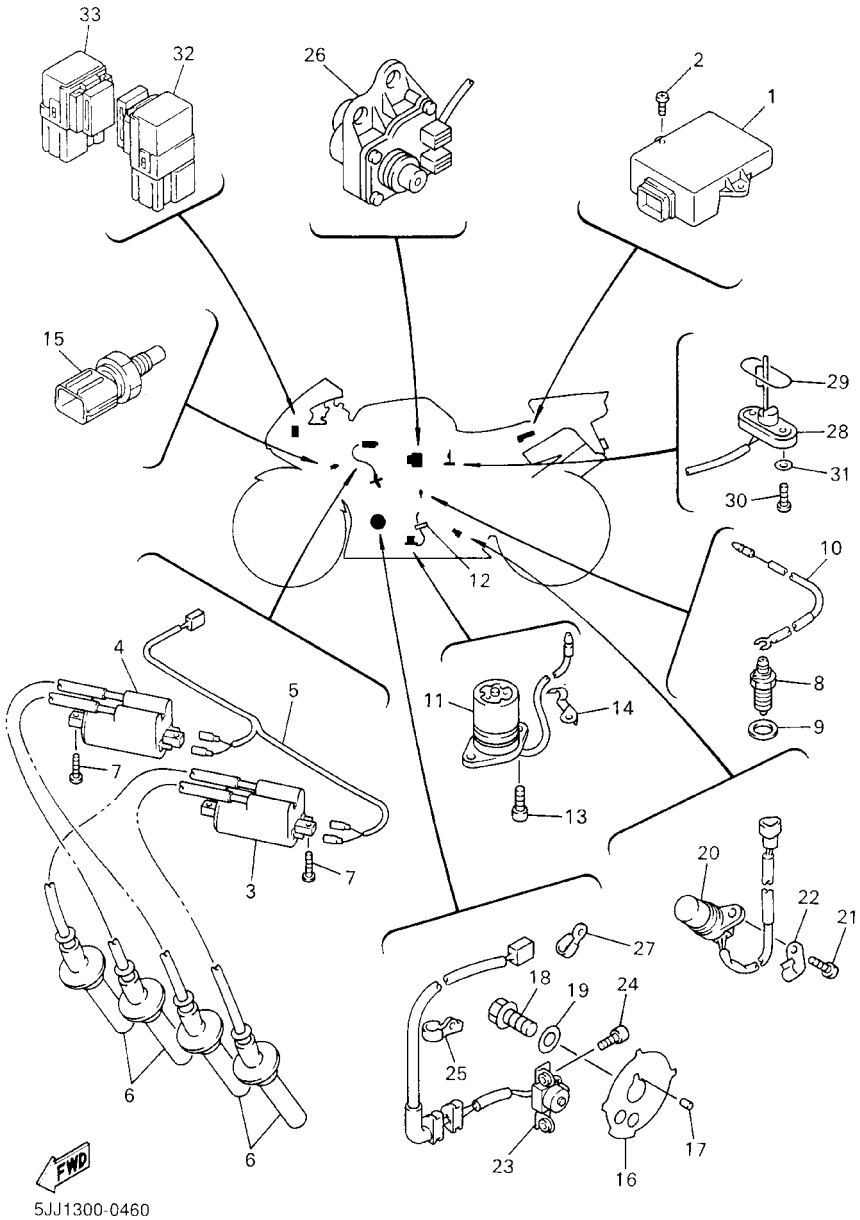

FIG. 46 ELECTRICAL 1

REF. NO.	PART NO.	DESCRIPTION	5JJ1					REMARKS
28	1UF–85752–02	SENDER UNIT ASSY, FUEL METER	1					
29	42X–85753–00	GASKET, SENDER UNIT	1					
30	90149–06011	SCREW	2					
31	90202–05193	WASHER, PLATE	2					
32	5JJ–81950–10	RELAY ASSY	1					
33	5JJ–81950–20	RELAY ASSY	1					

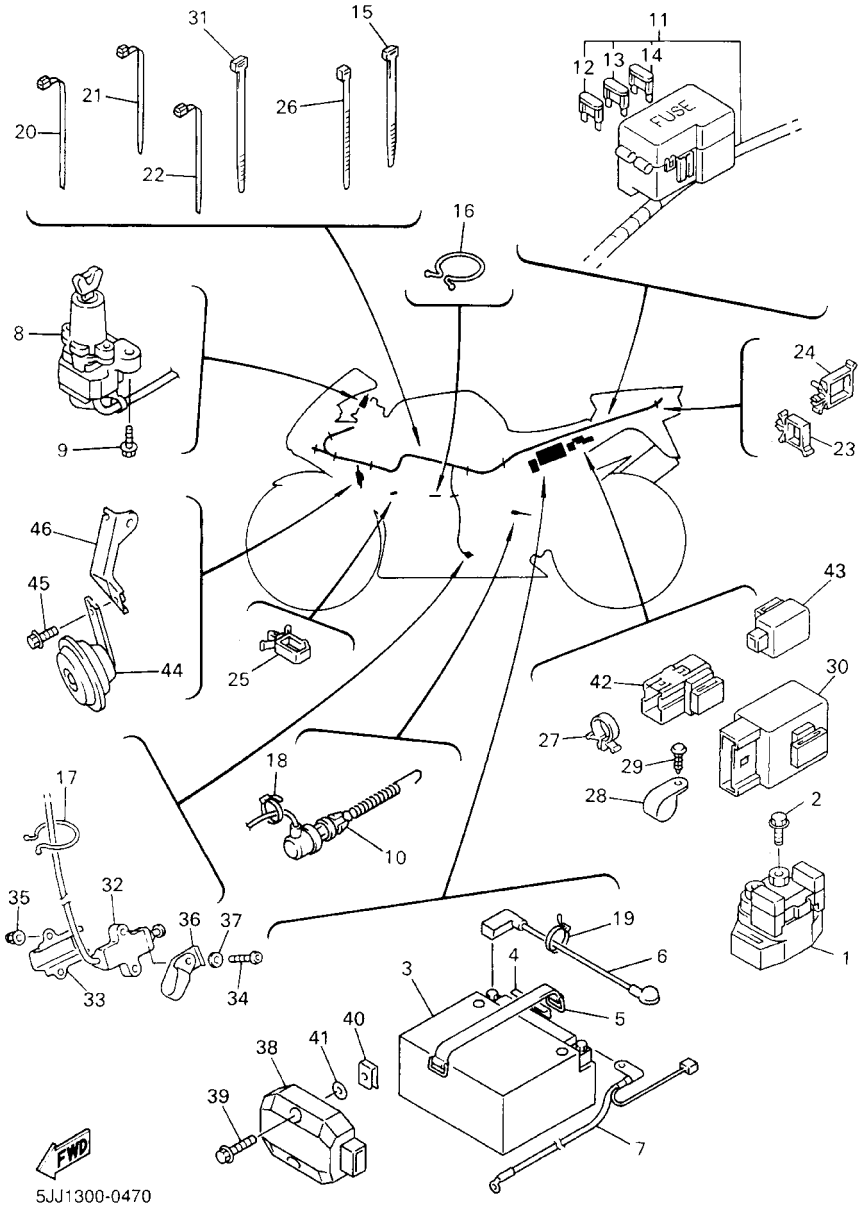

FIG. 47 ELECTRICAL 2

REF. NO.	PART NO.	DESCRIPTION	5JJ1					REMARKS
1	4YR–81940–00	STARTER RELAY ASSY	1					
2	95027–06008	BOLT, FLANGE	2					
3	4TX–82100–01	BATTERY ASSY (GT12B–4)	1					
4	2AL–84553–00	DAMPER	1					
5	5JJ–82131–00	BAND, BATTERY	1					
6	5JJ–82115–00	WIRE, PLUS LEAD	1					
7	5JJ–82116–00	WIRE, MINUS LEAD	1					
8	5JJ–82501–01	MAIN SWITCH STEERING LOCK	1					
9	90109–080G5	BOLT	2					
10	4XV–82530–01	STOP SWITCH ASSY	1					
11	5JJ–82590–00	WIRE HARNESS ASSY	1					
12	5JJ–82151–30	.FUSE (10A–BL)	3					
13	5JJ–82151–10	.FUSE (15A–BL)	2					
14	5JJ–82151–20	.FUSE (20A–BL)	3					
15	90464–12036	CLAMP	4					
16	90464–37257	CLAMP	1					
17	90464–16039	CLAMP	2					
18	5Y9–12491–00	CLAMP 1	1					
19	90464–13077	CLAMP	2					
20	90464–13073	CLAMP	5					
21	90464–15195	CLAMP	3					
22	90464–12036	CLAMP	1					
23	90464–16021	CLAMP	1					
24	90464–16025	CLAMP	1					
25	90464–15157	CLAMP	1					
26	90465–13275	CLAMP	1					
27	90464–13133	CLAMP	2					

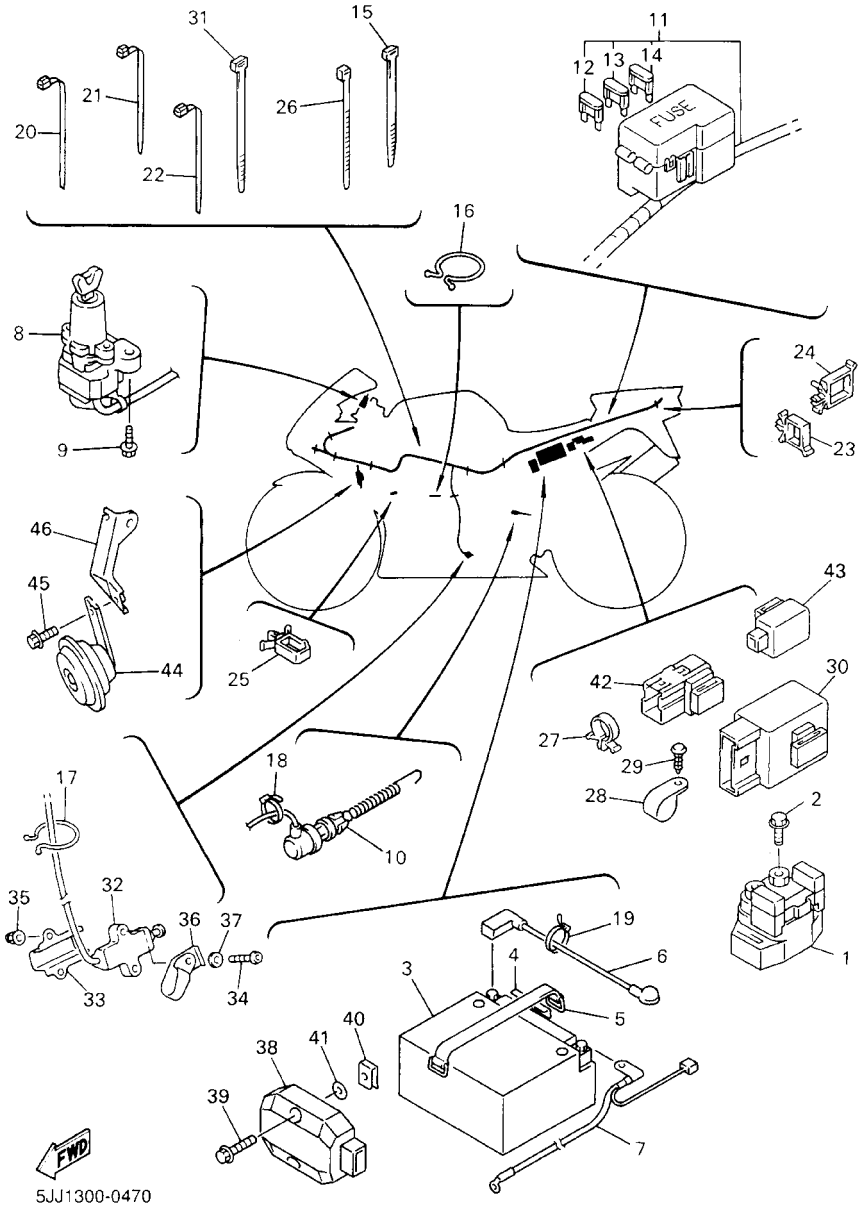

FIG. 47 ELECTRICAL 2

REF. NO.	PART NO.	DESCRIPTION	5JJ1					REMARKS
28	90464–18029	CLAMP	2					
29	90269–03001	RIVET	2					
30	5EB–81950–20	RELAY ASSY	1					
31	1UA–82591–00	BAND	1					
32	5JJ–82566–00	SWITCH, SIDE STAND	1					
33	5JJ–82388–00	PLATE	1					
34	92017–05030	BOLT, BUTTON HEAD	2					
35	95607–05200	NUT, SELF–LOCKING	2					
36	90461–10002	CLAMP	1					
37	90201–057H5	WASHER, PLATE	1					
38	4JH–81960–01	RECTIFIER & REGULATOR ASSY	1					
39	95827–06025	BOLT, FLANGE	2					
40	90183–06053	NUT, SPRING	2					
41	90202–05187	WASHER, PLATE	2					
42	5JJ–81950–20	RELAY ASSY	1					
43	4MY–83350–01	FLASHER RELAY ASSY	1					
44	3TB–83371–01	HORN	1					
45	95807–06010	BOLT, FLANGE	1					
46	4XV–2134K–00	BRACKET, HORN	1					

NUMERICAL INDEX

PART NO.	GRID NO.
5JJ–W0041–00	E – 8
3TU–W0042–51	E – 13
5JJ–W0045–00	E – 3
5FL–W0046–50	E – 6
3GM–W0047–10	E – 3
3MA–W0047–10	E – 3
4XV–W0047–50	E – 6
1J3–W0048–00	E – 3
	E – 6
4SV–W0057–00	E – 3
4SV–W0057–10	E – 3
4XV–W0057–50	E – 6
2TV–W2470–00	D – 15
5JJ–W2587–00	E – 8
5JJ–Y2171–00–P1	D – 6
5JJ–Y2171–10–P0	D – 6
5JJ–Y2410–30–01	D – 13
5JJ–Y2410–30–02	D – 13
5JJ–Y2808–00–P0	F – 4
5JJ–Y2808–00–4B	F – 4
5JJ–Y2809–00–P0	F – 4
5JJ–Y2809–00–4B	F – 4
5JJ–Y283G–00–1X	E – 15
5JJ–Y283G–10–0X	E – 15
4XV–Y283U–40–P1	F – 3
4XV–Y283U–50–1X	F – 3
4XV–Y283V–40–P1	F – 3
4XV–Y283V–50–1X	F – 3
5JJ–Y2881–00	E – 15
5JJ–11102–00	B – 2
4KG–1111G–00	B – 2
1WG–11133–11	B – 2
3TJ–11133–10	B – 2
4XV–11145–00	C – 6
4XV–11165–00	C – 6
4XV–11181–00	B – 2
4XV–11191–00	B – 2
4XV–11193–00	B – 2
214–11198–01	B – 12
4XV–1130E–00	C – 4
4XV–11411–00	B – 3
3GM–11416–A0	B – 3
3GM–11416–B0	B – 3
3GM–11416–00	B – 3
3GM–11416–10	B – 3
3GM–11416–20	B – 3
4XV–11549–00	B – 3
4XV–11603–00	B – 3

PART NO.	GRID NO.
4XV–11631–00	B – 3
4XV–11633–00	B – 3
4XV–11650–00	B – 3
4XV–11654–00	B – 3
3GM–11656–A0	B – 3
3GM–11656–B0	B – 3
3GM–11656–00	B – 3
3GM–11656–10	B – 3
4XV–12111–00	B – 4
4XV–12112–00	B – 4
4XV–12113–00	B – 4
4XV–12114–00	B – 4
1HX–12116–00	B – 4
1HX–12117–00	B – 4
1WG–12117–00	B – 4
1HX–12118–00	B – 4
1WG–12118–00	B – 4
4SV–12119–00	B – 4
4TV–12119–00	B – 4
5JJ–12121–00	B – 4
3GM–12126–00	B – 4
3FV–12153–09	B – 5
3FV–12153–20	B – 5
3LN–12153–09	B – 5
3LN–12153–20	B – 5
1HX–12168–A0	B – 4
1HX–12168–F0	B – 4
1HX–12168–H1	B – 4
1HX–12168–K1	B – 4
1HX–12168–M1	B – 4
1HX–12168–R1	B – 4
1HX–12168–U1	B – 4
1HX–12168–W1	B – 4
1HX–12168–Y1	B – 4
1HX–12168–00	B – 4
1HX–12168–20	B – 4
1HX–12168–40	B – 4
1HX–12168–60	B – 4
1HX–12168–80	B – 4
1HX–12169–E0	B – 5
1HX–12169–G0	B – 5
1HX–12169–J0	B – 5
1HX–12169–L0	B – 5
1HX–12169–N0	B – 5
1HX–12169–T0	B – 5
1HX–12169–11	B – 5
1HX–12169–31	B – 5
1HX–12169–50	B – 5

PART NO.	GRID NO.
1HX–12169–70	B – 5
1HX–12169–90	B – 5
5JJ–12171–00	B – 6
4XV–12176–00	B – 6
5JJ–12181–00	B – 6
4XV–12210–00	B – 6
4FM–12213–00	B – 6
5BE–12241–00	B – 6
4XV–12251–00	B – 6
4XV–12252–00	B – 6
4XV–12405–00	B – 9
4FM–12410–00	B – 9
4XV–12413–00	B – 9
4XV–12417–00	B – 9
4XV–12421–00	B – 7
4XV–12422–00	B – 7
4XV–1243A–00	B – 9
11H–12438–00	B – 7
4XV–12439–00	B – 7
4XV–12450–00	B – 7
5JJ–12461–00	B – 9
4JH–12462–00	B – 9
5JJ–12469–00	B – 8
5JJ–12481–00	B – 7
4XV–12482–00	B – 8
4XV–12483–00	B – 8
4XV–12484–00	B – 9
4XV–12485–00	B – 7
5Y9–12491–00	F – 13
	F – 15
4XV–12551–00	B – 9
4XV–12552–00	B – 10
5JJ–12576–00	B – 8
4XV–12577–00	B – 9
4XV–12578–00	B – 9
4XV–12579–00	B – 9
5JJ–12588–00	B – 9
5JJ–12589–00	B – 9
4XV–12822–00	B – 12
5JJ–1316E–00	B – 11
5JJ–13161–00	B – 12
4XV–13310–00	B – 7
4XV–13318–00	B – 12
4XV–13327–00	B – 11
4XV–13336–00	B – 7
4XV–13354–00	C – 11
4XV–13355–00	B – 7
4XV–13411–00	B – 11

PART NO.	GRID NO.
4XV–13412–00	B – 11
4XV–13414–00	B – 12
4XV–13416–00	B – 12
4XV–13417–01	B – 12
5GH–13440–00	B – 12
5JJ–13470–00	B – 12
4XV–13473–00	B – 12
4XV–13475–00	B – 12
4XV–13490–00	B – 12
1AE–13582–00	B – 2
4XV–13597–00	B – 13
4XV–13598–00	B – 13
4XV–13898–00	B – 12
4SV–13907–01	D – 14
4SV–1410A–00	C – 2
4XV–14103–00	C – 3
4SV–14105–00	C – 2
4KM–14107–15	C – 2
4SV–14112–00	C – 2
4KM–14142–15	C – 2
36Y–14147–00	C – 3
4XV–14149–30	C – 3
4XV–14149–40	C – 3
4XV–14149–60	C – 3
4XV–14149–70	C – 3
4XV–14149–90	C – 3
3LN–1416A–00	C – 3
620–14186–00	C – 2
4KP–14191–00	C – 2
3JE–14197–00	C – 3
4KM–14216–00	C – 2
4SV–14216–00	C – 2
3G2–14231–26	C – 2
8CC–14232–24	C – 2
4XV–14275–00	C – 2
5JJ–14294–00	B – 13
4NK–14327–00	C – 3
3LN–14348–00	C – 3
5JJ–14401–00	B – 13
4XV–14414–00	B – 13
4XV–14451–00	B – 13
4XV–14452–00	B – 13
5JJ–14453–00	B – 13
5JJ–1446A–00	B – 13
4XV–14562–00	C – 2
1FN–14565–00	C – 3
5JJ–14610–00	C – 4
4FM–14613–00	C – 4

PART NO.	GRID NO.
4SV–14638–00	C – 4
3GM–14683–00	C – 4
5JJ–14710–00	C – 4
4KM–14714–01	B – 15
4XV–14714–00	C – 4
5JJ–14715–00	C – 4
5JJ–14803–00	B – 15
5JJ–14811–00	C – 4
4SV–14821–00	C – 4
4HD–14826–00	C – 4
2TK–14865–01	C – 4
2TK–14867–01	C – 4
5JJ–14867–00	B – 15
5JJ–14871–00	B – 2
5JJ–14872–00	B – 15
5JJ–14873–00	B – 15
5JJ–14874–00	B – 15
5JJ–14881–00	B – 15
5JJ–14882–00	B – 15
5JJ–14883–00	B – 15
5JJ–14884–00	B – 15
5JJ–14886–00	B – 15
4XV–1490J–00	C – 2
3EN–1490K–00	C – 3
5JJ–14900–00	C – 2
5JJ–14901–00	C – 2
5JJ–14902–00	C – 2
5JJ–14903–00	C – 2
5JJ–14904–00	C – 2
4SV–14933–00	C – 2
4SV–14935–00	C – 3
28V–14952–00	C – 3
4SV–14968–00	C – 2
4SV–14985–00	C – 2
4SV–14987–00	C – 3
4YW–14987–00	C – 3
5JJ–14987–00	C – 3
4KG–14995–00	C – 2
5JJ–15100–00	C – 6
5JJ–15113–00	C – 8
5JJ–15163–00	C – 12
2H7–15361–00	C – 6
3F9–15362–00	C – 7
4XV–15411–00	C – 7
5JJ–15416–00	C – 7
4XV–15418–00	C – 7
4XV–15421–00	C – 7
5JJ–15425–00	C – 7

PART NO.	GRID NO.
4XV–15441–00	C – 8
4XV–15451–00	C – 7
5JJ–15456–00	C – 7
4XV–15461–00	C – 7
5JJ–15463–00	C – 7
5JJ–15515–00	C – 9
5JJ–15517–00	C – 9
4XV–15521–00	C – 9
4XV–15570–00	C – 9
4XV–16150–02	C – 10
26H–16154–00	C – 10
4XV–16154–00	C – 11
341–16321–13	C – 10
2H7–16325–00	C – 10
4XV–16331–00	C – 10
36Y–16334–00	C – 10
36Y–16335–00	C – 10
4XV–16340–00	C – 10
132–16346–00	C – 15
4XV–16351–00	C – 10
1TX–16352–00	C – 10
4XV–16356–01	C – 10
4XV–16370–00	C – 10
4XV–16382–00	C – 10
36Y–16383–00	C – 10
4XV–16384–00	C – 10
2H7–16385–00	C – 10
5JJ–17121–00	C – 12
5JJ–17131–00	C – 12
5JJ–17151–00	C – 12
5JJ–17158–00	C – 12
5JJ–17161–00	C – 12
5JJ–17211–00	C – 13
5JJ–17221–00	C – 12
5JJ–17231–00	C – 13
5JJ–17241–00	C – 12
5JJ–17251–00	C – 13
5JJ–17261–00	C – 12
5JJ–17402–00	C – 12
5JJ–17411–00	C – 12
4XV–17460–00	C – 13
5JJ–18101–00	C – 15
5JJ–18110–00	C – 15
5JJ–18112–00	C – 15
4XV–18115–00	C – 15
5JJ–18116–00	C – 15
4XV–18127–00	C – 15
5JJ–18140–00	C – 15

NUMERICAL INDEX

PART NO.	GRID NO.
4XV–18154–00	C – 15
4XV–18511–00	C – 14
5JJ–18512–00	C – 14
4XV–18513–00	C – 14
4XV–18531–00	C – 14
4XV–18536–00	C – 14
4XV–18540–00	C – 14
136–18542–00	C – 14
5JJ–21110–00	D – 2
4XV–2116A–00	D – 3
4XV–2116J–00	D – 3
5JJ–2117E–00	D – 4
4XV–2117F–00	D – 2
4XV–2117K–00	D – 15
4XV–2117M–00	D – 2
4XV–2117N–00	D – 3
4XV–2117R–00	D – 3
4XV–2134K–00	G – 2
5JJ–21348–00	D – 13
4XV–2137Y–01	D – 2
4XV–21376–00	D – 4
3XV–2144G–00	E – 11
4XV–21446–00	D – 2
4X7–2149Y–00	B – 13
4XV–21511–01–P0	D – 4
4XV–21511–01–P1	D – 4
5JJ–2153E–00	F – 4
5JJ–21611–00	D – 4
4XV–21650–01–P1	D – 8
4XV–21650–01–33	D – 8
5JJ–21669–01	D – 4
5JJ–2172X–00	D – 4
3SP–21732–00	D – 14
1JK–21735–00	F – 4
1KT–21746–00	D – 2
5JJ–21746–00	D – 6
5JJ–21747–00	F – 11
2TK–21757–00	F – 3
	F – 4
4XV–2177L–00	F – 3
	F – 4
4XV–21781–30	D – 6
4XV–21781–40	D – 6
26H–21828–00	D – 6
4XV–21871–00	D – 6
4XV–21875–00	D – 6
5JJ–22110–00	D – 7
5JJ–22128–00	D – 7

PART NO.	GRID NO.
5JJ–2214F–00	D – 8
4FN–22141–00	D – 7
5JJ–22151–00	D – 7
4XV–2217A–00	D – 7
4XV–2217M–00	D – 7
4XV–22184–00	D – 7
5JJ–22210–00	D – 9
4XV–22311–01	D – 8
5JJ–22332–00	E – 14
5JJ–23102–00	D – 11
5JJ–23103–00	D – 11
4XV–23110–00	D – 11
4XV–23111–00	D – 11
	D – 12
4XV–23118–00	D – 11
	D – 12
4XV–23120–00	D – 11
5JJ–23136–00	D – 11
5JJ–23141–00	D – 11
4XV–23142–00	D – 11
	D – 12
4EB–23144–00	D – 11
4XV–23145–00	D – 11
5JJ–23146–00	D – 11
3XJ–23147–L0	D – 11
	D – 12
26H–23156–00	D – 11
2K8–23158–L0	D – 11
5JJ–23170–00	D – 11
3LC–23181–00	D – 11
5JJ–23340–00	D – 12
3LC–23357–00	D – 11
	D – 12
4XV–2341B–00	D – 10
4XV–23415–00	D – 10
4XV–23418–00	D – 10
4JH–23434–00	E – 7
4XV–23435–00	D – 10
3FV–23462–00	D – 10
2H9–23469–00	E – 7
4XV–23818–00	D – 10
4XV–2411G–00	D – 6
4XV–2411H–00	D – 6
5JJ–24129–00	D – 6
5JJ–24139–00	D – 6
1LJ–2414J–00	E – 15
4EU–24141–00	E – 15
2GH–24181–00	D – 13

PART NO.	GRID NO.
4FM–24181–00	C – 4
4YR–24181–00	D – 13
2GH–24183–00	D – 13
4XV–24183–00	D – 13
5JJ–24186–00	D – 13
5JJ–24187–00	D – 13
5JJ–24191–00	D – 13
5JJ–24240–00	D – 13
4XV–24311–00	D – 14
4XV–24312–00	D – 14
3PA–24356–00	E – 8
4XV–24398–01	D – 14
4SV–24411–00	C – 2
4KM–24453–00	C – 3
4XV–24453–00	C – 3
4KM–24500–10	D – 13
4X8–24512–00	D – 13
3LN–24515–00	C – 3
3AJ–24523–00	D – 13
3AJ–24534–00	D – 13
1FK–24560–00	D – 14
5JJ–24602–00	D – 14
5JJ–2470F–00	D – 15
5JJ–24710–00	D – 15
5JJ–2475X–00	D – 15
5JJ–24750–00	D – 15
5JJ–24751–00	D – 15
5JJ–2478E–00	D – 15
4BP–24780–00	D – 15
5JJ–24792–00	D – 15
4XV–25117–00	E – 2
4XV–25118–00	E – 2
4XV–25168–00–33	E – 2
4XV–25181–00	E – 2
4XV–25186–00	E – 2
4XV–25317–00	E – 4
4XV–25327–00	E – 4
4XV–25338–00–33	E – 4
4XV–25364–00	E – 4
5JJ–25366–00	E – 4
5JJ–25367–00	E – 4
4XV–25376–00	E – 4
4XV–25377–00	E – 4
4XV–25381–00	E – 5
4XV–25383–00	E – 4
4XV–25388–00	E – 4
4XV–25389–00	E – 5
29L–25398–00	E – 2

PART NO.	GRID NO.
29L–25398–00	E – 4
29L–25398–10	E – 2
	E – 4
29L–25398–20	E – 2
	E – 4
4XV–25443–20	E – 4
5JJ–2580T–00	E – 3
5JJ–2580U–00	E – 3
5JJ–2580W–00	E – 6
5JJ–2581T–00	E – 3
4XV–25819–00	E – 6
3LN–2582A–00	E – 13
3TJ–2582F–01	E – 8
4XV–2582W–00	E – 6
3TU–2583V–01	E – 13
3LN–2585F–00	E – 13
3LN–2585H–00	E – 13
3GM–25852–50	E – 8
3XP–25852–50	E – 13
2VN–25854–00	E – 13
3FV–25854–00	E – 8
2J2–25855–50	E – 8
2VN–25855–00	E – 13
2VN–25866–00	E – 8
56A–25867–00	E – 8
4XV–2587A–00	E – 8
4XV–25872–00	E – 8
4XV–25873–00	E – 9
4XV–25874–00	E – 13
4XV–25875–00	D – 4
4FM–25876–00	E – 14
4XV–25876–00	D – 4
4XV–25886–01	E – 14
4XV–25887–00	E – 8
3FV–2589A–00	E – 8
3FV–2589F–00	E – 8
3FV–2589G–00	E – 8
3GM–2589H–00	E – 8
5JJ–25894–00	E – 13
5JJ–25894–10	E – 8
5JJ–25895–00	E – 13
4SV–25919–00	E – 3
4XV–25919–50	E – 6
4SV–25924–00	E – 3
	E – 6
3GM–25925–00	E – 3
	E – 6
4XV–26121–00	E – 7

PART NO.	GRID NO.
4XV–26122–00	E – 7
4YR–26240–01	E – 7
4YR–26241–01	E – 7
4XV–26246–00	E – 7
5JJ–26280–00	E – 15
3XW–26281–01	E – 7
3XW–26282–01	E – 7
5JJ–26290–00	E – 15
4SV–26298–00	E – 15
4XV–26302–01	E – 7
5JJ–26331–00	E – 7
5EB–26332–00	E – 8
5JJ–26335–00	E – 7
5JJ–26399–00	E – 7
5JJ–27211–00	E – 13
4XV–27222–01	E – 13
4XV–27311–00	E – 10
5JJ–27315–00	E – 10
5JJ–27321–00	E – 10
4NX–27351–00	E – 10
5EB–27352–00	E – 10
5JJ–27410–00	E – 10
5JJ–27420–00	E – 11
36Y–27424–00	E – 11
4XV–27424–00	D – 2
5JJ–27430–00	E – 11
5JJ–27437–00	E – 11
5JJ–27440–00	E – 11
5JJ–27442–00	E – 10
5JJ–27443–00	E – 10
5JJ–27445–00	E – 10
5JJ–27446–00	E – 11
5JJ–27813–00	E – 13
4XV–28100–00	D – 5
5JJ–28301–00	F – 3
5JJ–28301–10	F – 3
5JJ–28303–00	F – 3
5JJ–28303–10	F – 3
4XV–28315–20	E – 15
4XV–28315–30	E – 15
5JJ–2832P–01	E – 15
4XV–28328–20	F – 3
4XV–28328–50	F – 3
4XV–28336–00	E – 15
4XV–28338–20	F – 3
4XV–28338–40	F – 3
1AE–2834E–00	D – 4
4BR–2834E–00	F – 4

PART NO.	GRID NO.
4XV–2834E–00	E – 15
5JJ–2834W–00	E – 15
4XV–28349–00	E – 15
5JJ–28356–01	E – 15
4XV–2836A–00	F – 3
4XV–2836E–00	F – 3
4XV–2836F–00	F – 5
4XV–2836G–00	F – 5
4XV–2836K–10	F – 4
4XV–2836L–10	F – 4
4XV–2836M–10	F – 4
4XV–2836M–10–P0	F – 4
1AE–2837J–00	D – 13
4XV–2837L–00	E – 15
4XV–2837M–00	E – 15
1TX–28371–00	E – 15
	F – 4
4SV–28371–00	F – 4
4XV–28371–00	D – 2
4XV–28372–00	D – 8
3XV–28386–00	E – 15
	F – 4
4XV–2839H–50	F – 3
4XV–2839H–60	F – 3
5JJ–2848L–00	F – 4
5JJ–2848M–00	F – 4
J45–78159–00	F – 10
4XV–81410–00	F – 6
4XV–81450–00	F – 6
4XV–81670–10	F – 13
4XV–81673–00	F – 13
5JJ–81801–00	F – 7
5JJ–81828–00	F – 7
5JJ–8183G–00	F – 7
5JJ–81846–00	F – 7
5JJ–81890–00	F – 7
4YR–81940–00	F – 15
5EB–81950–20	G – 2
5JJ–81950–10	F – 14
5JJ–81950–20	F – 14
	G – 2
4JH–81960–01	G – 2
4TX–82100–01	F – 15
5JJ–82115–00	F – 15
5JJ–82116–00	F – 15
5JJ–82131–00	F – 15
5JJ–82151–10	F – 15
5JJ–82151–20	F – 15

NUMERICAL INDEX

PART NO.	GRID NO.
5JJ–82151–30	F – 15
5JJ–82305–00	F – 13
4XV–82309–00	F – 13
4XV–82310–00	F – 13
4XV–82320–00	F – 13
5H0–8235Y–M0	D – 14
4XV–82370–00	F – 13
5JJ–82388–00	G – 2
5JJ–82501–01	F – 15
4XV–82530–01	F – 15
3GB–82540–01	F – 13
5JJ–82541–00	F – 13
5JJ–82566–00	G – 2
5JJ–82590–00	F – 15
1UA–82591–00	G – 2
4XV–82910–11	F – 12
4XV–82917–00	F – 12
5JJ–83310–00	F – 8
306–83311–40	F – 8
5JJ–83318–00	F – 8
5JJ–83320–00	F – 8
5JJ–83330–00	F – 8
4JH–83332–00	F – 8
5JJ–83340–00	F – 8
4JH–83342–00	F – 8
4MY–83350–01	G – 2
3TB–83371–01	G – 2
5JJ–83500–00	F – 9
5JJ–83500–10	F – 9
4XV–83513–00	E – 15
	F – 11
	F – 9
5JJ–83591–00	F – 13
4XV–83755–01	F – 13
4XV–83912–11	F – 12
5JJ–83913–00	F – 12
4XV–83922–01	E – 8
4XV–83945–00	F – 12
5DM–83963–01	F – 12
5JJ–83972–00	F – 12
3FV–83980–00	E – 8
5JJ–84310–00	F – 10
5JJ–84310–10	F – 10
5JJ–84312–00	F – 10
8V0–84314–00	F – 10
4SV–84347–00	F – 10
5JJ–84359–00	F – 10
4SV–84397–00	F – 10

PART NO.	GRID NO.
2AL–84553–00	F – 15
5JJ–84710–00	F – 11
1A2–84714–41	F – 11
5JJ–84755–00	F – 11
3Y6–85130–02	D – 5
4XV–85132–00	D – 4
4XV–85720–01	F – 13
1UF–85752–02	F – 14
42X–85753–00	F – 14
4FM–85820–01	F – 13
4SV–85885–00	C – 3
4XV–90445–00	C – 3
90101–08662	E – 10
90101–08766	E – 5
90105–06154	B – 7
90105–06384	B – 2
90105–07342	B – 6
90105–08015	C – 6
90105–093A5	C – 6
90105–10017	D – 7
90105–10018	D – 7
90105–10020	D – 9
90105–10021	D – 7
90105–10022	E – 12
90105–10290	F – 13
90105–105A0	E – 6
90105–105A6	F – 6
90105–105A7	E – 3
90109–06013	E – 13
90109–06014	C – 7
	C – 8
90109–06015	C – 7
	C – 8
90109–064G6	E – 3
	E – 6
90109–065G3	C – 6
90109–066F0	B – 2
90109–080G5	F – 15
90109–083E0	E – 10
	E – 11
90109–085G6	E – 10
	E – 11
90109–10002	E – 10
90109–104G5	D – 2
90110–05112	D – 14
90110–05201	D – 6
90110–06136	C – 8
90110–06224	C – 7

PART NO.	GRID NO.
90110–06225	B – 12
90110–06226	B – 8
	B – 9
	C – 14
	E – 10
90110–06258	D – 15
90111–06019	C – 15
90116–10485	E – 4
90116–10619	C – 6
90119–06009	D – 4
90119–06010	D – 4
90119–06044	D – 13
90119–06052	D – 8
	F – 4
90119–06096	D – 14
	D – 8
90119–06114	D – 10
90119–06115	C – 4
90119–06117	D – 6
90119–06187	C – 4
90119–06190	D – 13
90149–04278	D – 4
90149–06011	D – 13
	F – 14
90149–06233	E – 10
	E – 11
90149–06286	C – 12
90149–06308	D – 15
90149–08296	E – 10
	E – 11
90150–05023	E – 15
90150–05039	D – 6
90150–06036	D – 6
	F – 4
90154–05013	D – 3
	D – 4
	E – 15
90154–06061	D – 4
90159–06056	E – 13
90164–05014	E – 15
	F – 9
90170–06228	C – 15
90170–20323	C – 10
90170–28419	D – 10
90176–06055	F – 2
90176–10075	B – 2
90179–05523	E – 15
90179–08327	B – 3

PART NO.	GRID NO.
90179–08410	C – 4
90179–10683	B – 2
90179–10693	B – 2
90179–22063	C – 13
90179–30691	D – 10
90183–05061	D – 4
	D – 6
90183–05074	E – 15
90183–06053	E – 13
	G – 2
90185–10002	D – 2
90185–18167	D – 7
90185–24165	E – 5
90201–04018	D – 4
90201–050T4	C – 4
90201–057H5	G – 2
90201–05725	D – 5
	F – 11
90201–06042	E – 10
	E – 11
90201–06071	B – 9
90201–08089	C – 9
90201–081R9	E – 10
90201–08612	C – 5
90201–096J9	C – 6
90201–10008	D – 2
90201–10013	B – 2
90201–101J1	E – 10
90201–10118	E – 13
	E – 9
90201–103U7	F – 6
90201–106M5	C – 4
90201–10614	C – 11
90201–10669	E – 12
90201–107K6	F – 13
90201–120K4	C – 15
90201–12541	B – 7
90201–13008	E – 10
	E – 11
90201–146F9	E – 10
90201–18264	D – 7
90201–224L4	C – 13
90201–257R5	E – 5
90201–281U8	D – 10
90202–05187	G – 2
90202–05193	D – 13
	F – 14
90202–30235	D – 10

PART NO.	GRID NO.
90209–25342	C – 12
90209–25349	C – 12
90209–25350	C – 12
90209–30343	C – 13
90209–30344	C – 12
90209–30345	C – 12
90215–25218	C – 10
90215–30233	C – 13
90243–08029	E – 10
	E – 11
90250–08022	C – 7
90269–03001	G – 2
90269–07077	D – 2
	D – 4
	D – 6
	F – 5
90269–07084	D – 2
90269–08001	E – 14
90338–07124	D – 2
90338–15202	D – 2
90338–16262	C – 6
90338–20263	C – 6
90340–14132	B – 12
90340–27001	B – 2
90340–32116	C – 7
90387–06006	D – 13
90387–06007	D – 13
90387–061K9	D – 3
90387–0615J	D – 8
90387–062L2	D – 14
90387–06372	D – 8
90387–065J6	B – 13
	D – 4
90387–06697	E – 11
90387–07391	B – 15
	B – 9
90387–08005	D – 2
90387–10001	E – 12
90387–1012A	D – 7
90387–1012B	D – 7
90387–1013U	D – 7
90387–106U7	C – 4
90387–1112F	D – 2
90387–12002	D – 2
90387–2511A	C – 12
90387–2810U	C – 12
90387–2811B	C – 12
90387–3310V	C – 12

PART NO.	GRID NO.
90387–3311C	C – 12
90401–10160	E – 9
90401–10172	E – 13
	E – 9
90401–20145	B – 12
90413–07007	B – 13
90413–10016	C – 3
90430–06014	B – 2
	C – 9
90430–08143	C – 7
90430–10148	F – 13
90445–086J6	D – 6
90445–09074	B – 10
90445–10015	D – 14
90445–10143	B – 13
90445–11013	B – 13
90445–11452	B – 13
90445–117K0	B – 13
90445–11730	B – 13
90445–142K2	D – 14
90445–161K7	C – 6
90445–19002	E – 10
90446–17346	E – 13
90450–22017	B – 10
90450–28014	B – 9
90450–32015	B – 9
90450–38040	B – 8
	B – 9
90450–57044	B – 13
90450–75083	B – 13
90461–10002	G – 2
90461–10003	C – 7
90462–08225	F – 13
90462–10182	F – 6
90464–07259	D – 4
90464–12036	F – 15
90464–13073	F – 15
90464–13077	F – 15
90464–13133	F – 15
90464–15157	F – 15
90464–15195	F – 15
90464–16021	F – 15
90464–16025	F – 15
90464–16039	F – 15
90464–18029	G – 2
90464–37257	F – 15
90465–08013	F – 13
90465–08028	F – 13

NUMERICAL INDEX

PART NO.	GRID NO.
90465–08191	F – 13
90465–13275	F – 15
90467–08003	B – 10
	D – 6
90467–08092	B – 15
90467–09006	D – 14
90467–10041	B – 13
90467–11019	D – 6
90467–11090	B – 10
	B – 13
	B – 9
	C – 3
90467–12124	D – 14
90467–12191	E – 13
90467–13042	B – 13
90467–13123	D – 14
90467–14015	C – 6
90467–14057	E – 13
90467–15001	B – 15
90467–15054	B – 15
90467–16098	B – 13
90467–17089	B – 15
90468–08104	C – 6
90468–12069	B – 3
90480–12072	D – 4
90480–12314	B – 13
90480–13398	D – 6
	F – 3
	F – 4
90480–15316	B – 15
90480–15363	B – 9
90480–18171	F – 10
	F – 11
90501–064L1	C – 14
90501–12743	E – 11
90506–14002	C – 15
90506–18003	E – 10
90506–20377	E – 13
90508–164B2	C – 10
90508–18134	E – 10
90508–18135	E – 11
90508–29012	C – 15
91314–06016	D – 13
91314–06020	C – 7
91314–06025	C – 7
91314–06035	C – 7
	E – 11
91314–06040	C – 7

PART NO.	GRID NO.
91314–06050	C – 7
91314–08030	D – 10
	D – 12
	E – 7
91314–08040	D – 12
91314–10040	D – 2
91314–10050	D – 2
91317–05010	D – 14
91317–06010	C – 9
	E – 9
91317–06012	B – 11
	B – 12
	B – 15
	B – 2
	C – 6
	E – 8
	F – 13
	F – 6
91317–06014	F – 13
91317–06016	B – 8
91317–06020	B – 11
91317–06025	B – 12
	B – 7
	E – 7
91317–06035	B – 7
91317–06040	B – 7
91317–06045	B – 7
91317–06060	B – 2
91380–04006	C – 4
91401–16012	E – 13
91701–06018	E – 13
91808–16023	B – 2
91808–30031	B – 7
92014–08016	C – 7
92017–05030	G – 2
92017–06014	C – 9
92017–06030	F – 6
92902–04100	E – 8
92902–04600	E – 8
92907–04600	F – 8
92907–06200	E – 13
92907–06600	D – 4
92907–08600	C – 10
92990–04600	C – 4
92990–06600	C – 4
93101–12004	C – 15
93102–12372	B – 7
93102–15212	C – 10

PART NO.	GRID NO.
93102–45465	C – 13
93106–28043	E – 2
93106–35042	E – 4
93106–40013	E – 4
93109–17071	D – 7
93210–06667	B – 11
	B – 7
93210–09165	B – 11
93210–12790	C – 6
93210–14579	B – 12
93210–15566	B – 12
93210–15620	E – 8
93210–16314	C – 6
93210–18417	B – 8
93210–235A1	B – 7
93210–23787	B – 9
93210–25711	F – 7
93210–27194	C – 7
93210–27370	B – 8
93210–32172	C – 7
93210–357A2	B – 7
93210–47675	B – 8
93210–55669	F – 7
93306–00106	B – 7
93306–00304	C – 10
93306–00420	E – 2
93306–07806	E – 4
93306–20531	E – 4
93306–20705	C – 12
93306–27208	C – 12
93306–37209	C – 13
93306–37807	C – 12
93310–228S5	C – 10
93310–338S6	C – 9
93315–11206	C – 15
93315–31502	C – 11
93315–31758	D – 7
93315–42523	D – 7
93315–42536	D – 7
93317–11020	C – 10
93317–43580	E – 4
93399–99932	D – 10
93410–08072	C – 9
93440–07149	B – 2
93440–10153	B – 2
93440–28062	C – 12
93440–32063	C – 12
93440–72049	C – 13

PART NO.	GRID NO.
93501–04011	E – 11
93603–12007	B – 7
93603–17070	B – 7
93604–10011	B – 7
93604–29151	F – 13
93607–44190	B – 6
93900–00030	E – 2
	E – 4
94112–17012	E – 2
94119–17009	E – 4
94580–25078	B – 11
94581–69114	E – 4
94591–49130	B – 6
94681–69031	E – 4
94701–00318	B – 2
94701–00319	B – 2
95024–08035	D – 2
95027–06008	F – 15
95027–06010	E – 14
95027–06012	B – 2
95027–06020	B – 8
	F – 12
95027–06025	B – 6
	B – 9
	F – 7
95304–06700	C – 15
95304–08700	E – 13
95307–08600	E – 5
95604–06200	E – 11
95604–10200	E – 4
95606–06100	E – 8
95607–04100	D – 4
95607–05100	D – 5
95607–05200	G – 2
95607–06100	F – 12
95607–06200	D – 13
95607–08200	E – 15
95607–10200	D – 7
	D – 9
	E – 10
95617–08625	B – 2
95707–06500	D – 15
	D – 4
95807–06008	E – 11
95807–06010	G – 2
95807–06012	F – 5
95814–06050	C – 6
95817–06010	B – 9

PART NO.	GRID NO.
95817–06020	B – 14
95817–06025	C – 10
95817–06045	B – 7
	C – 6
95817–06055	C – 6
95817–06060	C – 6
95817–06065	C – 6
95817–06070	C – 6
95817–06110	D – 13
95817–08025	C – 4
95817–08040	C – 4
95817–08050	C – 6
95824–06020	C – 15
95827–06020	B – 15
95827–06025	B – 9
	G – 2
95827–08025	D – 2
97007–06016	D – 8
97007–06030	D – 4
97080–05012	C – 4
97080–06008	C – 4
97702–40610	F – 8
97704–40012	F – 4
97707–40012	D – 15
97707–50016	F – 10
	F – 11
	F – 13
	F – 5
97707–60025	F – 13
98502–04012	E – 8
98507–03008	D – 13
98507–04008	F – 8
98507–04010	F – 12
98507–05010	C – 2
98507–05012	C – 2
98507–05025	B – 13
	F – 12
98507–05035	E – 7
98507–05045	B – 13
	F – 12
98707–03016	F – 12
98707–04008	C – 2
98907–06016	D – 3
99001–07600	C – 10
99009–10400	C – 11
99009–52500	E – 4
99221–00180	D – 13
99241–00080	D – 6

PART NO.	GRID NO.
99241–00100	D – 4
99241–00320	F – 4
99530–08012	B – 12
	C – 7
	C – 8
99530–10014	C – 6
99530–10114	C – 6

CONTENTS

ENGINE

CYLINDER B2
CRANKSHAFT. PISTON B3
VALVE B4
CAMSHAFT. CHAIN B6
WATER PUMP B7
RADIATOR. HOSE B9
OIL PUMP B11
OIL CLEANER B12
INTAKE B13
AIR INDUCTION SYSTEM B15
CARBURETOR C2
EXHAUST C4
CRANKCASE C6
CRANKCASE COVER 1 . . . . . C7
STARTER C9
CLUTCH C10
TRANSMISSION C12
SHIFT CAM. FORK C14
SHIFT SHAFT C15

CHASSIS

FRAME D2
FENDER D4
SIDE COVER D6
REAR ARM D7
REAR SUSPENSION D9
STEERING D10
FRONT FORK D11
FUEL TANK D13
SEAT D15
FRONT WHEEL E2
FRONT BRAKE CALIPER E3
REAR WHEEL E4
REAR BRAKE CALIPER E6
STEERING HANDLE. CABLE E7
FRONT MASTER CYLINDER E8
STAND. FOOTREST E10
REAR MASTER CYLINDER E13
COWLING 1 . . . . . E15
COWLING 2 . . . . . F3
GENERATOR F6
STARTING MOTOR F7
FLASHER LIGHT F8
METER F9
HEADLIGHT F10
TAILLIGHT F11
HANDLE SWITCH. LEVER F12
ELECTRICAL 1 . . . . . F13
ELECTRICAL 2 . . . . . F15

INDEX

NUMERICAL INDEX M1